Lenovo ThinkSystem DM5000H Unified Hybrid Storage Array

Product Guide

Lenovo ThinkSystem DM5000H is a unified, hybrid storage system that is designed to provide performance, simplicity, capacity, security, and high availability for medium enterprises. Powered by the ONTAP software, ThinkSystem DM5000H delivers enterprise-class storage management capabilities with a wide choice of host connectivity options, flexible drive configurations, and enhanced data management features. The ThinkSystem DM5000H is a perfect fit for a wide range of enterprise workloads, including data analytics, artificial intelligence, engineering and design, enterprise applications, and other storage I/O-intensive applications.

ThinkSystem DM5000H models are 2U rack-mount controller enclosures that include two controllers, 64 GB RAM and 8 GB battery-backed NVRAM (32 GB RAM and 4 GB NVRAM per controller), and 24 SFF hot-swap drive bays (2U24 form factor). Controllers provide universal 1/10 GbE NAS/iSCSI or 4/8/16 Gb Fibre Channel (FC) ports, or 1/10 GbE RJ-45 ports for host connectivity.

A single ThinkSystem DM5000H Storage Array scales up to 144 drives with the attachment of Lenovo ThinkSystem DM240S 2U24 SFF, DM120S 2U12, and DM600S 4U60 LFF Expansion Enclosures. It also offers flexible drive configurations with the choice of 2.5-inch (SFF) and 3.5-inch (LFF) form factors, 7.2 K rpm NL SAS hard disk drives (HDDs), and SAS solid-state drives (SSDs).

Figure 1. Lenovo ThinkSystem DM5000H

Up to 12 DM5000H Storage Arrays can be combined into a clustered system in a NAS environment, or up to 6 DM5000H Storage Arrays can be combined into a clustered system in a SAN environment.

Full 3D Tour

Did you know?

A single ThinkSystem DM5000H can scale up to 1.96 PB of raw storage capacity. A cluster of the DM5000H storage systems can scale up to 23.5 PB for NAS or up to 11.7 PB for SAN environments.

The ThinkSystem DM5000H offers unified file and block storage connectivity with support for 1 GbE or 10 GbE NAS and iSCSI, and 8 Gb or 16 Gb Fibre Channel protocols at the same time.

Key features

The ThinkSystem DM5000H offers the following key features and benefits:

- Unified, hybrid storage with dual active/active controller configurations for high availability and performance.
- Improved performance and data protection with RAID-DP and RAID-TEC, as well as support for traditional RAID 4.
- Flexible host connectivity to match diverse client needs with support for unified NAS and SAN storage protocols, including 1/10 GbE NAS and iSCSI, and 8/16 Gb Fibre Channel connectivity.
- 12 Gb SAS drive-side connectivity with multipathing with up to 24x 2.5-inch small form factor (SFF) drives in the 2U24 SFF controller and expansion enclosures, up to 12x 3.5-inch large form factor (LFF) drives in the 2U12 LFF expansion enclosures, or up to 60x 3.5-inch LFF drives in the 4U60 LFF expansion enclosures.
- Scalability to up to 144 SFF or 120 LFF and 24 SFF drives with the attachment of the ThinkSystem DM240S 2U24 SFF, DM120S 2U12 LFF, or DM600S 4U60 LFF expansion enclosures to satisfy growing needs for storage capacity and performance.
- Flexibility in storing data on capacity-optimized SAS SSDs, performance-optimized enterprise SAS HDDs, or capacity-optimized enterprise NL SAS HDDs; mixing and matching drive types within a single system to perfectly meet performance and capacity requirements for various workloads.
- Acceleration of read-centric workloads with the high-speed, low-latency onboard NVMe SSD caching.
- A comprehensive set of advanced storage management features with the ONTAP software, including SSD read cache, hybrid storage pools, snapshots, volume copy, quality of service, thin provisioning, compression, deduplication, encryption, disk-based backup, application- and virtual machine-aware backup, quick data recovery, clustering, synchronous replication, asynchronous replication, and up to 84 drives.
- A core set of storage management features with the ONTAP Fundamentals software, including SSD read cache, hybrid storage pools, snapshots, quality of service, thin provisioning, compression, deduplication, encryption, quick data recovery, and asynchronous replication.
- Optional licensed functions, including WORM (write once, read many) data protection (SnapLock) and object storage tiering (FabricPool).
- Scale-out clustering of up to 12 ThinkSystem DM Series storage systems for NAS connectivity or up to 6 DM Series storage systems for SAN connectivity.
- Intuitive, web-based GUI for easy system setup and management.
- Lenovo XClarity support for centralized systems management of Lenovo x86 servers, switches, and storage, which provides automated agent-less discovery, inventory, monitoring, and additional platform-specific functions across multiple systems.
- Designed for 99.9999% availability with redundant hot-swap components, including controllers and I/O modules, power supplies, and non-disruptive firmware upgrades.
- Certified storage for Oracle VM.
- Certified storage for Citrix XenServer: http://hcl.xenserver.org/storage/910/Lenovo_DM_Series.

The ThinkSystem DM5000H supports the following drives:

- 2U24 SFF capacity-optimized SSDs: 960 GB, 3.84 TB, 7.68 TB, and 15.36 TB
- 2U24 SFF enterprise SAS HDDs: 900 GB, 1.2 TB, and 1.8 TB 10K rpm
- 2U12 LFF and 4U60 LFF high-capacity nearline HDDs: 4 TB, 8 TB, 10 TB, and 16 TB 7.2K rpm

All drives are dual-port and hot-swappable.

The ThinkSystem DM5000H supports attachment of the following ThinkSystem DM Series expansion enclosures:

- Up to 5 ThinkSystem DM240S 2U24 SFF enclosures.
- Up to 9 ThinkSystem DM120S 2U12 LFF enclosures.
- Up to 2 ThinkSystem DM600S 4U60 LFF enclosures.
- A combination of the DM240S, DM120S, and DM600S enclosures for a maximum of 144 drives.

Customers can intermix 2U24 SFF, 2U12 LFF, and 4U60 LFF expansion enclosures behind a 2U24 controller enclosure. This configuration delivers the added flexibility to mix 3.5-inch and 2.5-inch drives within a single system (but not within the enclosure).

More drives and expansion enclosures are designed to be dynamically added with virtually no downtime, which helps to quickly and seamlessly respond to ever-growing capacity demands.

The ThinkSystem DM5000H offers high levels of system and data availability with the following technologies:

- Dual-active controllers (high availability pair) with automatic load balancing and failover
- Mirrored, battery-backed controller NVRAM
- Dual-port SAS HDDs and SSDs with automatic drive failure detection and rebuild
- Redundant, hot-swappable and customer replaceable hardware components, including SFP+ transceivers, controllers, I/O modules, power supplies, cooling modules (4U60 LFF only), and drives
- Automated failover for the data path between the host and the drives with multipathing
- Non-disruptive controller and drive firmware upgrades
- Scale-out clustering

Components and connectors

The following figure shows the front of the ThinkSystem DM5000H or DM240S 2U SFF enclosure.

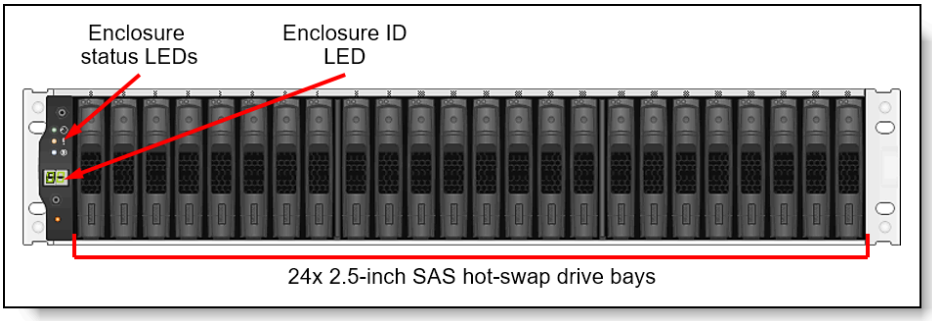

Figure 2. ThinkSystem DM5000H or DM240S enclosure front view

The front of the ThinkSystem DM5000H or DM240S 2U SFF enclosure includes the following components:

- 24 SFF hot-swap drive bays.
- Enclosure status LEDs.
- Enclosure ID LED.

The following figure shows the rear of the ThinkSystem DM5000H 2U controller enclosure with universal SFP+ host ports.

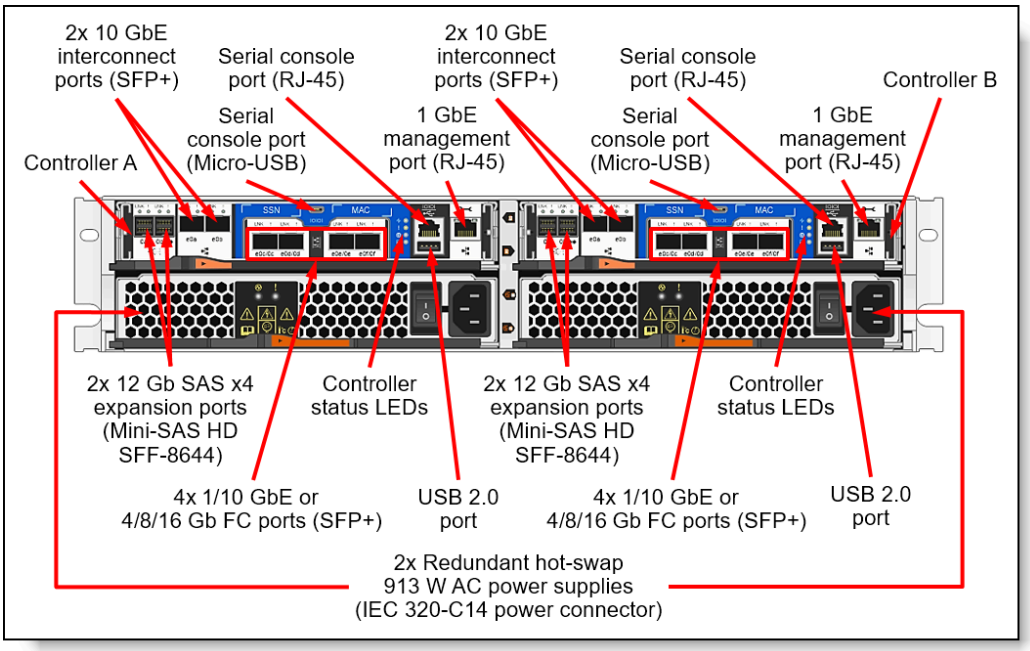

Figure 3. ThinkSystem DM5000H 2U controller enclosure rear view: Universal SFP+ host ports

The following figure shows the rear of the ThinkSystem DM5000H 2U controller enclosure with 10GBASE-T host ports.

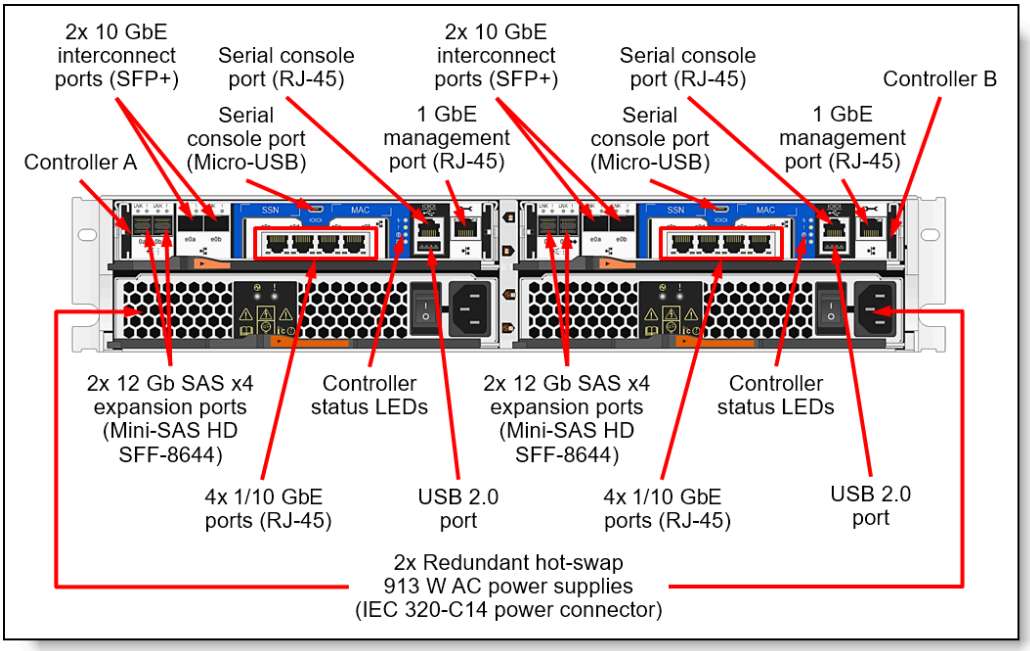

Figure 4. ThinkSystem DM5000H 2U controller enclosure rear view: 10GBASE-T host ports

The rear of the ThinkSystem DM5000H 2U controller enclosure includes the following components:

- Two redundant hot-swap controllers, each with the following ports:
  - Two SFP+ interconnect ports for direct-attach HA pair or switched cluster connections.
  - Four SFP+ host ports for 1/10 Gb GbE or 4/8/16 Gb FC connectivity or four 1/10 GbE RJ-45 ports.
  - Two 12 Gb SAS x4 ports (Mini-SAS HD SFF-8644) for connections to the expansion enclosures.
  - One RJ-45 10/100/1000 Mb Ethernet port for out-of-band management.
  - Two serial console ports (RJ-45 and Micro-USB) for another means to configure the system.
  - One USB Type A port (for ONTAP software installation or booting)
- Two redundant hot-swap 913 W (100 - 240 V) AC power supplies (IEC 320-C14 power connector) with integrated cooling fans.
- Controller status LEDs.

The following figure shows the front of the ThinkSystem DM120S 2U LFF expansion enclosure.

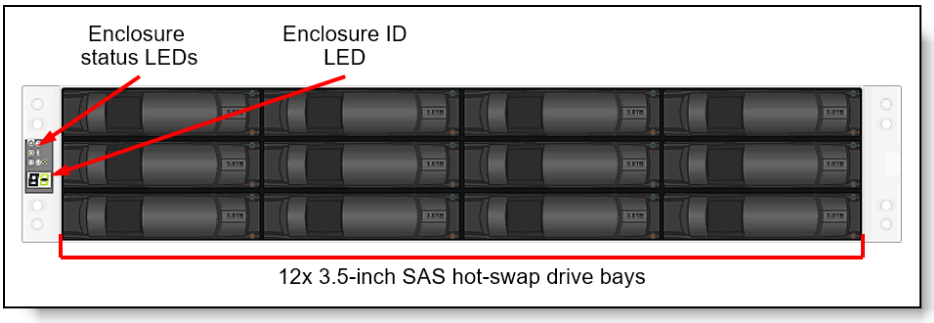

Figure 5. ThinkSystem DM120S 2U LFF expansion enclosure front view

The front of the ThinkSystem DM120S 2U LFF expansion enclosure includes the following components:

- 12 LFF hot-swap drive bays.
- Enclosure status LEDs.
- Enclosure ID LED.

The following figure shows the rear of the ThinkSystem DM240S or DM120S 2U expansion enclosure.

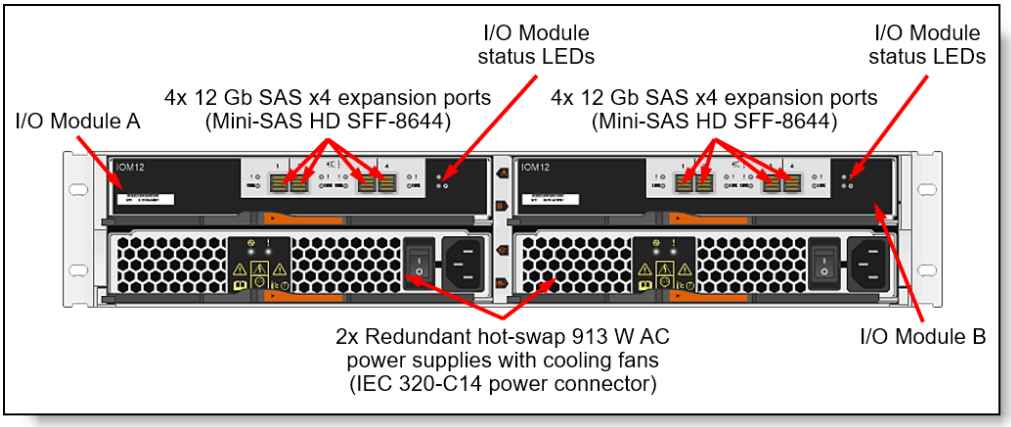

Figure 6. ThinkSystem DM240S or DM120S 2U expansion enclosure rear view

The rear of the ThinkSystem DM240S or DM120S 2U expansion enclosure includes the following components:

- Two redundant hot-swap I/O Modules; each I/O Module provides four 12 Gb SAS x4 expansion ports (Mini-SAS HD SFF-8644) for connections to the controller enclosures and for connecting the expansion enclosures between each other.
- Two redundant hot-swap 913 W (100 - 240 V) AC power supplies (IEC 320-C14 power connector) with integrated cooling fans.
- I/O Module status LEDs.

The following figure shows the front of the ThinkSystem DM600S 4U LFF expansion enclosure.

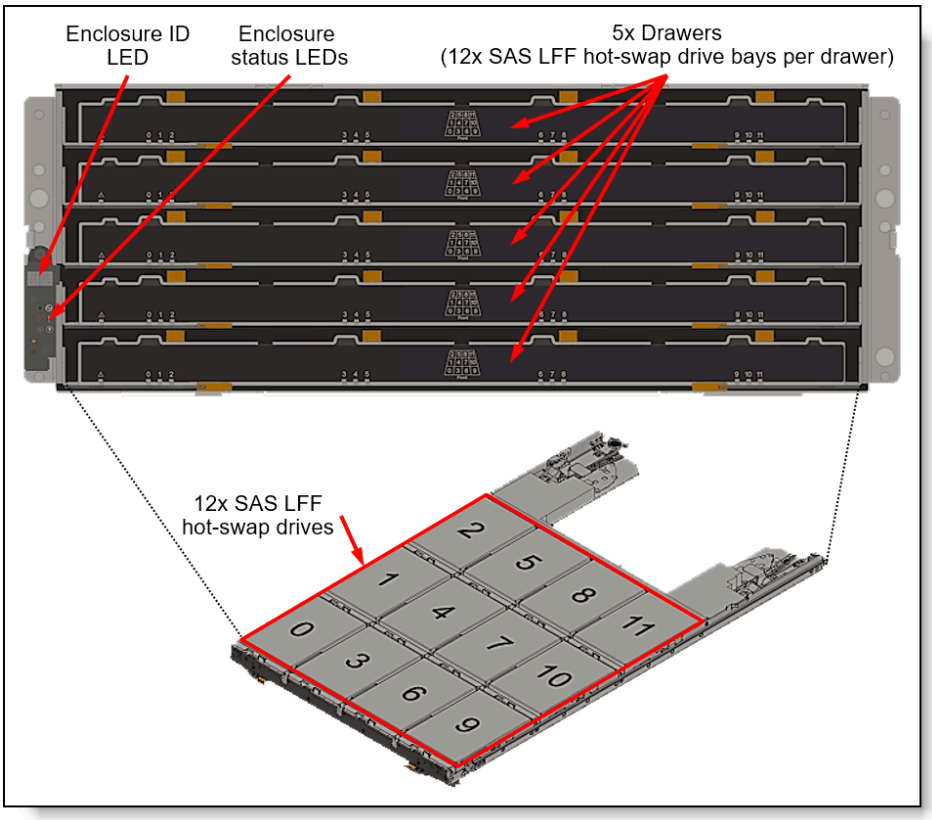

Figure 7. ThinkSystem DM600S 4U LFF expansion enclosure front view

The front of the ThinkSystem DM600S 4U LFF expansion enclosure includes the following components:

- Five drawers, each with 12 LFF hot-swap drive bays.
- Enclosure status LEDs.
- Enclosure ID LED.

The following figure shows the rear of the ThinkSystem DM600S 4U LFF expansion enclosure.

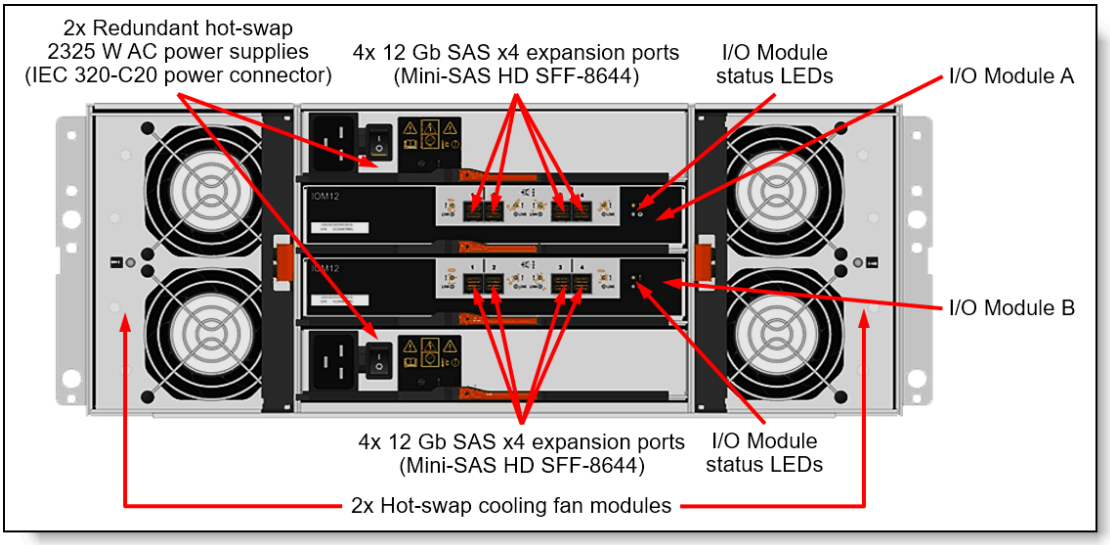

Figure 8. ThinkSystem DM600S 4U LFF expansion enclosure rear view

The rear of the ThinkSystem DM600S 4U LFF expansion enclosure includes the following components:

- Two redundant hot-swap I/O Modules; each I/O Module provides four 12 Gb SAS x4 expansion ports (Mini-SAS HD SFF-8644) for connections to the controller enclosures and for connecting the expansion enclosures between each other.
- Two redundant hot-swap 2325 W (200 - 240 V) AC power supplies (IEC 320-C20 power connector)
- Two hot-swap cooling fan modules; each module has two fans.
  Note: The failed cooling module should be replaced as soon as possible.
- I/O Module status LEDs.

System specifications

The following table lists the ThinkSystem DM5000H storage system specifications.

Note: The supported hardware options, software features, and interoperability listed in this product guide are based on the ONTAP software version 9.7. For details about specific software releases that introduced support for certain hardware options and software features, refer to the Release notes of the particular software release for the ThinkSystem DM5000H that can be found at:
http://datacentersupport.lenovo.com

Table 1. ThinkSystem DM5000H system specifications

Attribute	Specification
Form factor	• DM5000H controller enclosure (7Y57, 7D7V): 2U rack mount. • DM120S 2U12 LFF expansion enclosure (7Y59, 7D7X): 2U rack mount. • DM240S 2U24 SFF expansion enclosure (7Y58, 7D7Y): 2U rack mount. • DM600S 4U60 LFF expansion enclosure (7Y43, 7D7Z): 4U rack mount.
Controller configuration	Dual active-active controller configuration (HA pair). Up to 6 HA pairs can be combined into a single SAN cluster, or up to 12 HA pairs can be combined into a single NAS cluster. **Note:** The ONTAP Fundamentals software does not support clustering.
HA pair/cluster interconnect ports	4x 10 GbE SFP+ ports (DAC cables or SW fiber optics [LC]) (2 ports per controller).
RAID levels	RAID-4, RAID-DP, RAID-TEC.
Controller memory	64 GB RAM per system (32 GB per controller). 8 GB battery-backed NVRAM per system (4 GB per controller) mirrored between the controllers.
Controller cache	2 TB NVMe-based Flash Cache (1 TB per controller).
Drive bays	• Up to 144 SFF hot-swap drive bays (1x 2U24 controller enclosure + up to 5x 2U24 SFF expansion enclosures). • Up to 120 LFF and 24 SFF hot-swap drive bays (1x 2U24 controller enclosure + up to 2x 4U60 LFF or up to 9x 2U12 LFF expansion enclosures). Intermix of 2U24 SFF, 2U12 LFF, and 4U60 LFF enclosures is supported. **Note:** The ONTAP Fundamentals software supports up to 84 drives.
Drive technology	12 Gb SAS HDDs, 12 Gb NL SAS HDDs, 12 Gb SAS SSDs.
Drive expansion connectivity	• 2x 12 Gb SAS x4 (Mini-SAS HD SFF-8644) expansion ports on each of two controllers in the controller enclosure for the attachment of the expansion enclosures. • 4x 12 Gb SAS x4 (Mini-SAS HD SFF-8644) expansion ports on each of two I/O modules in the expansion enclosure for the attachment to the controller enclosure and daisy chaining of the expansion enclosures.

Drives	• 2U24 SFF drives:
	  ◦ 960 GB, 3.84 TB, 7.68 TB, and 15.36 TB SAS SSDs (1 DWD).
	  ◦ 900 GB, 1.2 TB, and 1.8 TB 10K rpm SAS HDDs.
	• 2U12 and 4U60 LFF drives: 4 TB, 8 TB, 10 TB, and 16 TB 7.2K rpm NL SAS HDDs.

Storage capacity	Up to 1.917 PB (120x 16 TB LFF HDDs + 24x 1.8 TB SFF HDDs).
Storage protocols	• NAS (File access): NFS and CIFS/SMB. • SAN (Block access): iSCSI and FC.
Host connectivity	Base ports (per controller enclosure): • 8x 1 GbE (RJ-45 UTP)/10 GbE (DAC cable or SW fiber optic cable, LC) or 4/8/16 Gb FC (SW fiber optic cable, LC) SFP+ host ports (4 ports per controller); or • 8x 1/10 GbE RJ-45 UTP host ports (4 ports per controller). **Note:** ONTAP does not support host direct attach for FC protocol.

Attribute	Specification
Host operating systems	Microsoft Windows Server 2012 R2, 2016, and 2019; Red Hat Enterprise Linux (RHEL) 6, 7, and 8; SUSE Linux Enterprise Server (SLES) 11, 12, and 15; VMware vSphere 6.0, 6.5, 6.7, and 7.0.
Performance*	Up to 148 000 random read IOPS (8 KB blocks).

Configuration maximums**	• Maximum raw storage capacity: 1.24 PB
	• Maximum flash pool cache size: 24 TB
	• Maximum aggregate size: 400 TB
	• Maximum number of FlexVol volumes per controller: 1000
	• Maximum volume size: 100 TB (The maximum size will be increased up to 300TB in ONTAP 9.12.1P2 and later.)
	• Maximum number of LUNs per controller: 8192
	• Maximum number of LUNs per FlexVol volume: 512
	• Maximum LUN size: 16 TB (The maximum size will be increased up to 128TB in ONTAP 9.12.1P2 and later.)
	• Maximum number of drives in a RAID group (data + parity drives):
	  ◦ RAID 4: 14 (13 + 1 SAS SSDs) or 7 (6 + 1 NL SAS HDDs)
	  ◦ RAID-DP: 28 (26 + 2 SAS SSDs) or 20 (18 + 2 NL SAS HDDs)
	  ◦ RAID-TEC: 29 (26 + 3 SAS SSDs or NL SAS HDDs)
	• Maximum number of initiators per controller: 2048
	• Maximum number of snapshots per FlexVol volume: 1023

Cooling	Redundant cooling with two cooling modules (DM600S 4U60 LFF) or with the fans that are built into power supplies (DM5000H, DM240S 2U24 SFF, and DM120S 2U12 LFF).
Power supply	Two redundant hot-swap 913 W (100 - 240 V) (DM5000H, DM240S 2U24 SFF, and DM120S SFF enclosures) or 2325 W (200 - 240 V) (DM600S 4U60 LFF enclosures) Platinum AC power supplies.
Hot-swap parts	Controllers, I/O modules, drives, power supplies, cooling modules (DM600S 4U60 LFF only), and SFP+ transceivers and DAC cables.
Management ports	• 1x 1 GbE port (UTP, RJ-45) per controller for out-of-band management. • 2x Serial console ports (RJ-45 and Micro-USB) for system configuration.
Management interfaces	ThinkSystem Storage Manager web-based GUI; SSH CLI; Serial console CLI; SNMP, email, and syslog alerts; optional Lenovo XClarity.
Security features	Secure Socket Layer (SSL), Secure Shell (SSH), user level security, role-based access control (RBAC), LDAP authentication.
Warranty and support	1-year or 3-year base warranty, customer-replaceable unit and onsite limited warranty with selectable service levels: 9x5 service coverage next business day (NBD) onsite response (Foundation) or 24x7 service coverage with 4-hour onsite response (Essential). Premier Support is also available. Software support is included in the Foundation or Essential Service for the duration of the warranty period.
Dimensions	Controller enclosure: • Height: 85 mm (3.4 in.) • Width: 447 mm (17.6 in.) • Depth: 483 mm (19.0 in.) 2U24 SFF expansion enclosure: • Height: 85 mm (3.4 in.) • Width: 449 mm (17.7 in.) • Depth: 484 mm (19.1 in.) 2U12 LFF expansion enclosure: • Height: 85 mm (3.4 in.) • Width: 447 mm (17.6 in.) • Depth: 483 mm (19.0 in.) 4U60 LFF expansion enclosure: • Height: 174 mm (6.9 in.) • Width: 449 mm (17.7 in.) • Depth: 922 mm (36.3 in.)

Attribute	Specification
Weight	• Controller enclosure (fully configured): 27.6 kg (60.8 lb) • 2U24 SFF expansion enclosure (fully configured): 24.4 kg (53.8 lb) • 2U12 LFF expansion enclosure (fully configured): 28.7 kg (63.3 lb) • 4U60 LFF expansion enclosure (fully configured): 111.5 kg (245.8 lb)

* Estimated performance based on internal measurements.
** For a detailed list of configuration limits and restrictions for a specific version of the software, refer to the Lenovo Data Center Support website:
http://datacentersupport.lenovo.com

Controller enclosures

Preconfigured and factory-integrated models of the ThinkSystem DM5000H Unified Hybrid Storage Array are configured by using the Lenovo Data Center Solution Configurator (DCSC):
http://dcsc.lenovo.com

The following table lists the preconfigured models of the ThinkSystem DM5000H.

Table 3. ThinkSystem DM5000H preconfigured models for EMEA

Model for EMEA	Description
Relationship models - Europe, Middle East, and Africa (EMEA) (sorted by bundle and drive capacity)	
7Y571040EA	ThinkSystem DM5000H, 12x960GB SSD, Fundamentals Bundle 9.7, Non-NVE, 10G BaseT
7Y571035EA	ThinkSystem DM5000H, 12x960GB SSD, Fundamentals Bundle 9.7, Non-NVE, CNA
7Y57103PEA	ThinkSystem DM5000H, 12x960GB SSD, Fundamentals Bundle 9.7, NVE, 10G BaseT
7Y571032EA	ThinkSystem DM5000H, 12x960GB SSD, Fundamentals Bundle 9.7, NVE, CNA
7Y57103SEA	ThinkSystem DM5000H, 24x960GB SSD, Fundamentals Bundle 9.7, Non-NVE, CNA
7Y57103QEA	ThinkSystem DM5000H, 24x960GB SSD, Fundamentals Bundle 9.7, NVE, 10G BaseT
7Y571041EA	ThinkSystem DM5000H, 24x960GB SSD, Fundamentals Bundle 9.7, NVE, 10G BaseT
7Y571033EA	ThinkSystem DM5000H, 24x960GB SSD, Fundamentals Bundle 9.7, NVE, CNA
7Y571037EA	ThinkSystem DM5000H, 12x1.2TB HDD, Fundamentals Bundle 9.7, Non-NVE, 10G BaseT
7Y57103EEA	ThinkSystem DM5000H, 12x1.2TB HDD, Fundamentals Bundle 9.7, NVE, 10G BaseT
7Y571043EA	ThinkSystem DM5000H, 12x1.2TB SSD, Fundamentals Bundle 9.7, Non-NVE, CNA
7Y57103FEA	ThinkSystem DM5000H, 12x1.2TB SSD, Fundamentals Bundle 9.7, NVE, CNA
7Y57103TEA	ThinkSystem DM5000H, 24x1.2TB HDD, Fundamentals Bundle 9.7, NVE, CNA
7Y57103JEA	ThinkSystem DM5000H, 24x1.2TB SSD, Fundamentals Bundle 9.7, Non-NVE, 10G BaseT
7Y57104UEA	ThinkSystem DM5000H, 24x1.2TB SSD, Fundamentals Bundle 9.7, Non-NVE, CNA
7Y57103GEA	ThinkSystem DM5000H, 24x1.2TB SSD, Fundamentals Bundle 9.7, NVE, 10G BaseT
7Y57103CEA	ThinkSystem DM5000H, 12x1.8TB HDD, Fundamentals Bundle 9.7, Non-NVE, 10G BaseT
7Y57103NEA	ThinkSystem DM5000H, 12x1.8TB HDD, Fundamentals Bundle 9.7, Non-NVE, CNA
7Y57103WEA	ThinkSystem DM5000H, 12x1.8TB HDD, Fundamentals Bundle 9.7, NVE, 10G BaseT
7Y57103YEA	ThinkSystem DM5000H, 12x1.8TB SSD, Fundamentals Bundle 9.7, NVE, CNA
7Y57103VEA	ThinkSystem DM5000H, 24x1.8TB HDD, Fundamentals Bundle 9.7, Non-NVE, 10G BaseT
7Y57103UEA	ThinkSystem DM5000H, 24x1.8TB HDD, Fundamentals Bundle 9.7, NVE, CNA
7Y571042EA	ThinkSystem DM5000H, 24x1.8TB SSD, Fundamentals Bundle 9.7, Non-NVE, CAN
7Y57103HEA	ThinkSystem DM5000H, 24x1.8TB SSD, Fundamentals Bundle 9.7, NVE, 10G BaseT
7Y57103LEA	ThinkSystem DM5000H, 12x3.84TB SSD, Fundamentals Bundle 9.7, Non-NVE, 10G BaseT
7Y571034EA	ThinkSystem DM5000H, 12x3.84TB SSD, Fundamentals Bundle 9.7, Non-NVE, CNA
7Y57103AEA	ThinkSystem DM5000H, 12x3.84TB SSD, Fundamentals Bundle 9.7, NVE, 10G BaseT

Model for EMEA	Description
7Y57103REA	ThinkSystem DM5000H, 12x3.84TB SSD, Fundamentals Bundle 9.7, NVE, CNA
7Y57103KEA	ThinkSystem DM5000H, 24x3.84TB SSD, Fundamentals Bundle 9.7, Non-NVE, 10G BaseT
7Y571039EA	ThinkSystem DM5000H, 24x3.84TB SSD, Fundamentals Bundle 9.7, Non-NVE, CNA
7Y571038EA	ThinkSystem DM5000H, 24x3.84TB SSD, Fundamentals Bundle 9.7, NVE, 10G BaseT
7Y57103MEA	ThinkSystem DM5000H, 24x3.84TB SSD, Fundamentals Bundle 9.7, NVE, CNA
7Y57104AEA	ThinkSystem DM5000H, 12x960GB SSD, Premium Bundle 9.7, Non-NVE, 10G BaseT
7Y57104CEA	ThinkSystem DM5000H, 12x960GB SSD, Premium Bundle 9.7, Non-NVE, CNA
7Y57103ZEA	ThinkSystem DM5000H, 12x960GB SSD, Premium Bundle 9.7, NVE, 10G BaseT
7Y57104SEA	ThinkSystem DM5000H, 12x960GB SSD, Premium Bundle 9.7, NVE, CNA
7Y57104NEA	ThinkSystem DM5000H, 24x960GB SSD, Premium Bundle 9.7, Non-NVE, 10G BaseT
7Y57104PEA	ThinkSystem DM5000H, 24x960GB SSD, Premium Bundle 9.7, Non-NVE, CNA
7Y57103DEA	ThinkSystem DM5000H, 24x960GB SSD, Premium Bundle 9.7, NVE, 10G BaseT
7Y571045EA	ThinkSystem DM5000H, 24x960GB SSD, Premium Bundle 9.7, NVE, CAN
7Y57104JEA	ThinkSystem DM5000H, 12x1.2TB SSD, Premium Bundle 9.7, Non-NVE, 10G BaseT
7Y57104FEA	ThinkSystem DM5000H, 12x1.2TB SSD, Premium Bundle 9.7, Non-NVE, CNA
7Y57104MEA	ThinkSystem DM5000H, 12x1.2TB SSD, Premium Bundle 9.7, NVE, 10G BaseT
7Y57104WEA	ThinkSystem DM5000H, 12x1.2TB SSD, Premium Bundle 9.7, NVE, CAN
7Y57104KEA	ThinkSystem DM5000H, 24x1.2TB SSD, Premium Bundle 9.7, Non-NVE, 10G BaseT
7Y571049EA	ThinkSystem DM5000H, 24x1.2TB SSD, Premium Bundle 9.7, Non-NVE, CNA
7Y57103BEA	ThinkSystem DM5000H, 24x1.2TB SSD, Premium Bundle 9.7, NVE, 10G BaseT
7Y571046EA	ThinkSystem DM5000H, 24x1.2TB SSD, Premium Bundle 9.7, NVE, CAN
7Y57104REA	ThinkSystem DM5000H, 12x1.8TB SSD, Premium Bundle 9.7, Non-NVE, 10G BaseT
7Y57104EEA	ThinkSystem DM5000H, 12x1.8TB SSD, Premium Bundle 9.7, Non-NVE, CNA
7Y57104HEA	ThinkSystem DM5000H, 12x1.8TB SSD, Premium Bundle 9.7, NVE, 10G BaseT
7Y57104XEA	ThinkSystem DM5000H, 12x1.8TB SSD, Premium Bundle 9.7, NVE, CNA
7Y57104GEA	ThinkSystem DM5000H, 24x1.8TB SSD, Premium Bundle 9.7, Non-NVE, 10G BaseT
7Y571047EA	ThinkSystem DM5000H, 24x1.8TB SSD, Premium Bundle 9.7, Non-NVE, CAN
7Y571036EA	ThinkSystem DM5000H, 24x1.8TB SSD, Premium Bundle 9.7, NVE, 10G BaseT
7Y571048EA	ThinkSystem DM5000H, 24x1.8TB SSD, Premium Bundle 9.7, NVE, CNA
7Y57104DEA	ThinkSystem DM5000H, 12x3.84TB SSD, Premium Bundle 9.7, Non-NVE, 10G BaseT
7Y57104BEA	ThinkSystem DM5000H, 12x3.84TB SSD, Premium Bundle 9.7, Non-NVE, CNA
7Y57104LEA	ThinkSystem DM5000H, 12x3.84TB SSD, Premium Bundle 9.7, NVE, 10G BaseT
7Y57104TEA	ThinkSystem DM5000H, 12x3.84TB SSD, Premium Bundle 9.7, NVE, CNA
7Y57104VEA	ThinkSystem DM5000H, 24x3.84TB SSD, Premium Bundle 9.7, Non-NVE, 10G BaseT
7Y57104QEA	ThinkSystem DM5000H, 24x3.84TB SSD, Premium Bundle 9.7, Non-NVE, CNA
7Y57103XEA	ThinkSystem DM5000H, 24x3.84TB SSD, Premium Bundle 9.7, NVE, 10G BaseT
7Y571044EA	ThinkSystem DM5000H, 24x3.84TB SSD, Premium Bundle 9.7, NVE, CNA

The following table lists the CTO base models of the ThinkSystem DM5000H.

Table 4. ThinkSystem DM5000H CTO base models

Description	Machine Type/Model	Feature code
Lenovo ThinkSystem DM5000H (3-year warranty)	7D7VCTO1WW	BEY7

Configuration note:

- Two DM3000/DM5000 10GBASE-T controllers (feature code B39G) or two DM3000/DM5000 SFP+ controllers (feature code B39F) must be selected during the CTO configuration process, and both controllers must be of the same type (either 10GBASE-T or SFP+).

The models of the ThinkSystem DM5000H ship with the following items:

- One chassis with the following components:
  - Two controllers with the configured software version (No Encryption or Encryption Capable)
  - Two power supplies
- Rack Mount Kit
- 2 m USB Cable (USB Type A to Micro-USB)
- Electronic Publications Flyer
- Two power cables:
  - CTO models: Two customer-configured power cables
  - Preconfigured models in Table 2: Two 2.8m 10A/100-250V, C13 to C14 Rack Power Cables
- Additional configured components (model-specific)

Note: The system already contains redundant SAS paths. No redundant SAS cabling is required if no expansion is configured with the system.

Controllers

The ThinkSystem DM5000H controller enclosures ship with two DM3000/DM5000 10GBASE-T or SFP+ controllers. A *controller* provides interfaces for host connectivity, management, and internal drives, and it runs ONTAP storage management software. Each DM5000H controller enclosure provides 64 GB RAM, 8 GB battery-backed NVRAM, and 2 TB NVMe SSD flash cache (32 GB RAM, 4 GB NVRAM, and 1 TB NVMe SSD flash cache per controller).

The ThinkSystem DM5000H controller enclosures ship with four interconnect 10 GbE SFP+ ports (two ports per controller) to cable a directly-connected dual-controller HA pair or for switched cluster interconnect with multiple dual-controller HA pairs. Up to six HA pairs can be combined into a single SAN cluster or up to 12 HA pairs can be combined into a single NAS cluster.

The ThinkSystem DM5000H controller enclosures ship with one of the following interface types:

- 8x Universal SFP+ ports (four ports per controller) for 1/10 GbE NAS / iSCSI or 4/8/16 Gb FC host connectivity.
- 8x 1/10 GbE RJ-45 ports (four ports per controller) for 1/10 GbE NAS / iSCSI host connectivity.

Each DM5000H controller enclosure also provides four integrated 12 Gb SAS x4 expansion ports (Mini-SAS HD SFF-8644 connectors) (two ports per controller) for the attachment of the ThinkSystem DM Series expansion enclosures.

Configuration notes:

- Two controllers are required for selection. Both controllers must be of the same type (either 16 Gb FC / 10 GbE or 10GBASE-T, but not both types), and they must have matching configurations of the base ports (type and physical connections).
- A pair of the universal SFP+ base ports (e0c/0c and e0d/0d or e0e/0e and e0f/0f) in the system must have the same connectivity type (either Ethernet or Fibre Channel, but not both types) and the same type of physical connections; different pairs might have different types of connectivity.

The following table lists the controllers for the DM5000H Storage Array and supported connectivity options.

Table 5. DM5000H storage array controllers and connectivity options

Description	Part number	Feature code	Maximum quantity per controller enclosure
Controllers			
Lenovo ThinkSystem DM3000/DM5000 Controller, 10GBASE-T	None*	B39G	2
Lenovo ThinkSystem DM3000/DM5000 Controller, 16Gb FC / 10GbE	None*	B39F	2
SFP+ options for base ports			
1Gb RJ-45 iSCSI SFP+ Module 1 pack	4XF7A14917	B4K7	8
8Gb Fibre Channel SFP+ Module 1 pack	4XF7A14918	B4K8	8
16Gb Fibre Channel SFP+ Module 1 pack	4XF7A14920	B4KA	8
SFP+ options for base ports and interconnect ports			
10Gb SW Optical iSCSI SFP+ Module 1 pack	4XF7A14919	B4K9	12
OM4 cable options for 8 Gb FC, 16 Gb FC, and 10 GbE SW SFP+ optical transceivers			
Lenovo 0.5m LC-LC OM4 MMF Cable	4Z57A10845	B2P9	12
Lenovo 1m LC-LC OM4 MMF Cable	4Z57A10846	B2PA	12
Lenovo 3m LC-LC OM4 MMF Cable	4Z57A10847	B2PB	12
Lenovo 5m LC-LC OM4 MMF Cable	4Z57A10848	B2PC	12
Lenovo 10m LC-LC OM4 MMF Cable	4Z57A10849	B2PD	12
Lenovo 15m LC-LC OM4 MMF Cable	4Z57A10850	B2PE	12
Lenovo 25m LC-LC OM4 MMF Cable	4Z57A10851	B2PF	12
Lenovo 30m LC-LC OM4 MMF Cable	4Z57A10852	B2PG	12
OM3 cable options for 8 Gb FC, 16 Gb FC, and 10 GbE SW SFP+ optical transceivers			
Lenovo 0.5m LC-LC OM3 MMF Cable	00MN499	ASR5	12
Lenovo 1m LC-LC OM3 MMF Cable	00MN502	ASR6	12
Lenovo 3m LC-LC OM3 MMF Cable	00MN505	ASR7	12
Lenovo 5m LC-LC OM3 MMF Cable	00MN508	ASR8	12
Lenovo 10m LC-LC OM3 MMF Cable	00MN511	ASR9	12
Lenovo 15m LC-LC OM3 MMF Cable	00MN514	ASRA	12
Lenovo 25m LC-LC OM3 MMF Cable	00MN517	ASRB	12
Lenovo 30m LC-LC OM3 MMF Cable	00MN520	ASRC	12
DAC cable options for 10 GbE SFP+ connectivity (SFP+ base ports and interconnect ports)			
0.5m Passive DAC SFP+ Cable	00D6288	A3RG	12
1m Passive DAC SFP+ Cable	90Y9427	A1PH	12
1.5m Passive DAC SFP+ Cable	00AY764	A51N	12
2m Passive DAC SFP+ Cable	00AY765	A51P	12
3m Passive DAC SFP+ Cable	90Y9430	A1PJ	12
5m Passive DAC SFP+ Cable	90Y9433	A1PK	12
7m Passive DAC SFP+ Cable	00D6151	A3RH	12
UTP Category 6 cables options for 1/10 GbE RJ-45 host connectivity and 1 GbE RJ-45 management ports			
0.75m Green Cat6 Cable	00WE123	AVFW	10
1.0m Green Cat6 Cable	00WE127	AVFX	10

Description	Part number	Feature code	Maximum quantity per controller enclosure
1.25m Green Cat6 Cable	00WE131	AVFY	10
1.5m Green Cat6 Cable	00WE135	AVFZ	10
3m Green Cat6 Cable	00WE139	AVG0	10
10m Green Cat6 Cable	90Y3718	A1MT	10
25m Green Cat6 Cable	90Y3727	A1MW	10

* Factory-installed only.

Expansion enclosures

The ThinkSystem DM5000H supports attachment of the following DM Series expansion enclosures:

- Up to 5 ThinkSystem DM240S 2U24 SFF enclosures.
- Up to 9 ThinkSystem DM120S 2U12 LFF enclosures.
- Up to 2 ThinkSystem DM600S 4U60 LFF enclosures.
- A combination of the DM240S, DM120S, and DM600S enclosures for a maximum of 144 drives.

Note: The ONTAP Fundamentals software supports up to 84 drives.

DM240S 2U24 SFF, DM120S 2U12 LFF, and DM600S 4U60 LFF expansion enclosures can be intermixed behind a 2U24 controller enclosure. The expansion enclosures can be added to the system non-disruptively.

The following table lists the CTO base models for the ThinkSystem DM Series expansion enclosures.

Table 6. CTO base models for the ThinkSystem DM Series expansion enclosures

Description	Machine Type/Model	Feature code
3-year warranty		
DM120S 2U12 LFF Expansion Enclosure	7D7XCTO1WW	BEY6
DM240S 2U24 SFF Expansion Enclosure	7D7YCTO1WW	BEY7
DM600S 4U60 LFF Expansion Enclosure	7D7ZCTO1WW	BQ9W

Configuration note:

- Two I/O expansion modules (feature code BQ9X) are selected by default in the configurator, and the selection cannot be changed.

The models of the ThinkSystem DM240S, DM120S, and DM600S ship with the following items:

- One chassis with the following components:
  - Two I/O modules
  - Two power supplies
  - Two cooling modules (4U60 LFF only)
- Rack Mount Kit
- Electronic Publications Flyer
- Two customer-configured power cables
- Additional configured components (model-specific)

Each ThinkSystem DM Series expansion enclosure ships with two SAS I/O expansion modules. Each *I/O expansion module* provides two external 12 Gb SAS x4 ports (Mini-SAS HD SFF-8644 connectors labelled Port 1-4) that are used for connections to the ThinkSystem DM5000H and for daisy chaining the expansion enclosures between each other.

The dual-path HA (high availability) connectivity topology for the enclosures is shown in the following figure.

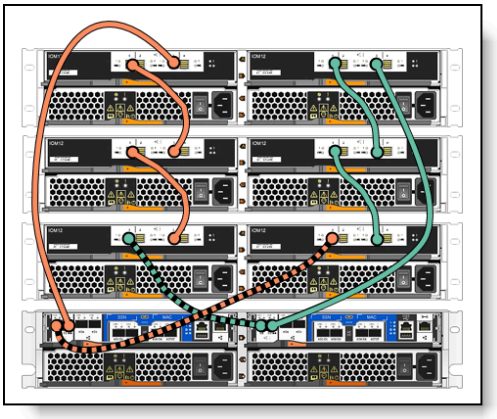

Figure 9. DM5000H expansion enclosure connectivity topology

Expansion cabling rules:

- Port 0b on the Controller 1 is the primary path that is connected to the Port 3 on the I/O Module A in the last expansion enclosure in a stack.
- Port 1 on the I/O Module A in the last expansion enclosure is connected to Port 3 on the I/O Module A in the adjacent expansion enclosure, and so on (until the first expansion enclosure in a stack is cabled).
- Port 0a on the Controller 1 is the secondary path that is connected to the Port 1 on the I/O Module B in the first expansion enclosure in a stack.
- Port 0b on the Controller 2 is the primary path that is connected to the Port 3 on the I/O Module B in the last expansion enclosure in a stack.
- Port 1 on the I/O Module B in the last expansion enclosure is connected to Port 3 on the I/O Module B in the adjacent expansion enclosure, and so on (until the first expansion enclosure in a stack is cabled).
- Port 0a on the Controller 2 is the secondary path that is connected to the Port 1 on the I/O Module A in the first expansion enclosure in a stack.

The following table lists ordering information for the supported expansion enclosure connectivity options.

Table 7. Expansion enclosure connectivity options

Description	Part number	Feature code	Maximum quantity per one expansion enclosure
External MiniSAS HD 8644/MiniSAS HD 8644 0.5M Cable	00YL847	AU16	4
External MiniSAS HD 8644/MiniSAS HD 8644 1M Cable	00YL848	AU17	4
External MiniSAS HD 8644/MiniSAS HD 8644 2M Cable	00YL849	AU18	4
External MiniSAS HD 8644/MiniSAS HD 8644 3M Cable	00YL850	AU19	4

Configuration notes:

- The following quantities of SAS cables are needed for the stack of the expansion enclosures:
  - Two SAS cables per expansion enclosure in the stack for connecting the first expansion enclosure in the stack to the controller enclosure and for connections to the adjacent expansion enclosures.
  - Two additional SAS cables for connecting the last expansion enclosure in the stack to the controller enclosure.
- The length of the SAS cables that connect a 2U12 or 2U24 enclosure to an adjacent 4U60 enclosure should be at least 1 meter.

Drives

The ThinkSystem DM5000H and DM240S 2U24 SFF enclosures support up to 24 SFF hot-swap drives, the DM120S 2U12 LFF expansion enclosures support up to 12 LFF hot-swap drives, and the DM600S 4U60 LFF expansion enclosures support up to 60 LFF hot-swap drives.

Shipping requirement: 2U12 and 2U24 enclosures can be shipped with all drive bays populated, however the 4U60 enclosures must be shipped with drives removed.

The following table lists supported drive packs for the controller and expansion enclosures.

Configuration notes:

- When ordering the systems, select the drives that match the ONTAP offering and bundle you are installing on the DM controller. Drive feature codes are specific to Unified or SAN Only offerings, and to Base, Fundamentals and Premium bundles. See the Software section for details.
- Drives are sold in packs. Supported quantities are as follows:
  - The DM5000H 2U24 SFF controller enclosure supports only 12, 18 or 24 SFF drives
  - The DM240S 2U24 SFF expansion enclosure supports only 6, 12, 18 or 24 SFF drives
  - The DM120S 2U12 LFF expansion enclosure supports only 6 or 12 LFF drives
  - The DM600S 4U60 LFF expansion enclosure supports only 30 or 60 LFF drives
- For factory-installed drive packs, all drives in the enclosure must be of the same type and capacity

Field upgrades: Drive packs for field upgrades can be ordered via the CTO base 7D4FCTO4WW, ThinkSystem DM Drive Pack Upgrades. These are for use in existing expansion enclosures that have not been fully populated with the factory-installed drive packs

Configuration notes:

In DCSC when selecting 7D4FCTO4WW then the following options are auto-derived:

- B473 Configured with Lenovo ThinkSystem DM5000H is to do the drive pack upgrade to existing 1Y DM5000H models.
- BMAY Lenovo ThinkSystem DM5000H is to do the drive pack upgrade to existing 3Y DM5000H models.

The following table lists supported drive packs for DM5000H enclosure.

Table 10. DM5000H 2U24 SFF enclosure drive packs for ONTAP

Part number	Feature code	Description	Maximum quantity per 2U24 enclosure
2.5-inch Non-SED, SSD			

Part number	Feature code	Description	Maximum quantity per 2U24 enclosure
CTO only	BLRP	Lenovo ThinkSystem 5.8TB (6x 960GB, 2.5", Non-SED, SSD) Drive Pack for DM5000H - Premium/Complete Bundle - ONTAP: Unified	4
CTO only	BLRQ	Lenovo ThinkSystem 23TB (6x 3.84TB, 2.5", Non-SED, SSD) Drive Pack for DM5000H - Premium/Complete Bundle - ONTAP: Unified	4
CTO only	BLRR	Lenovo ThinkSystem 46.1TB (6x 7.68TB, 2.5", Non-SED, SSD) Drive Pack for DM5000H - Premium/Complete Bundle - ONTAP: Unified	4
CTO only	BLRS	Lenovo ThinkSystem 92.2TB (6x 15.36TB, 2.5", Non-SED, SSD) Drive Pack for DM5000H - Premium/Complete Bundle - ONTAP: Unified	4
CTO only†	BLRG	Lenovo ThinkSystem 5.8TB (6x 960GB, 2.5", Non-SED, SSD) Drive Pack for DM5000H - Fundamental Bundle - ONTAP: Unified	4
CTO only†	BLRH	Lenovo ThinkSystem 23TB (6x 3.84TB, 2.5", Non-SED, SSD) Drive Pack for DM5000H - Fundamental Bundle - ONTAP: Unified	4
CTO only†	BLRJ	Lenovo ThinkSystem 46.1TB (6x 7.68TB, 2.5", Non-SED, SSD) Drive Pack for DM5000H - Fundamental Bundle - ONTAP: Unified	4
CTO only†	BLRK	Lenovo ThinkSystem 92.2TB (6x 15.36TB, 2.5", Non-SED, SSD) Drive Pack for DM5000H - Fundamental Bundle - ONTAP: Unified	4
2.5-inch, SAS 10K, Non-SED HDD			
CTO only	BLRV	Lenovo ThinkSystem 10.8TB (6x 1.8TB, 2.5", SAS 10K, Non-SED HDD) Drive Pack for DM5000H - Premium/Complete Bundle - ONTAP: Unified	4
CTO only	BX1H	Lenovo ThinkSystem 14.4TB (6x 2.4TB, 2.5", SAS 10K, Non-SED HDD) Drive Pack for DM5000H - Premium/Complete Bundle - ONTAP: Unified	4
CTO only†	BLRN	Lenovo ThinkSystem 10.8TB (6x 1.8TB, 2.5", SAS 10K, Non-SED HDD) Drive Pack for DM5000H - Fundamental Bundle - ONTAP: Unified	4
CTO only†	BX1J	Lenovo ThinkSystem 14.4TB (6x 2.4TB, 2.5", SAS 10K, Non-SED HDD) Drive Pack for DM5000H - Fundamental Bundle - ONTAP: Unified	4

† Available world-wide except China

Note: Drives listed above are supported in different geography markets. However, some countries may not support them and will not be listed in DCSC either.

The following table lists supported drive packs for the DM5000H 2U24 SFF.

Table 11. DM5000H 2U24 SFF drive packs

Part number	Feature code	Description	Maximum quantity per 2U24 enclosure
3.5-inch 12 Gbps NL SAS hot-swap HDDs			
CTO only	B90R	Lenovo ThinkSystem 5.8TB (6x 960GB, 2.5", SSD) Drive Pack	4
CTO only	B90T	Lenovo ThinkSystem 10.8TB (6x 1.8TB, 2.5", SAS 10K HDD) Drive Pack	4
CTO only	BX12	Lenovo ThinkSystem 14.4TB (6x 2.4TB, 2.5", SAS 10K HDD) Drive Pack	4
CTO only	B90U	Lenovo ThinkSystem 23TB (6x 3.84TB, 2.5", SSD) Drive Pack	4
CTO only	B90W	Lenovo ThinkSystem 46.1TB (6x 7.68TB, 2.5", SSD) Drive Pack	4
CTO only	B90Z	Lenovo ThinkSystem 92.2TB (6x 15.36TB, 2.5", SSD) Drive Pack	4

Note: Drives listed above are currently supported in Brazil and USA.

The following table lists supported drive packs for the DM240S 2U24 SFF expansion enclosures.

Table 12. DM240S 2U24 SFF drive packs

Part number	Feature code	Description	Maximum quantity per 2U24 enclosure
3.5-inch 12 Gbps NL SAS hot-swap HDDs			
CTO only	B90R	Lenovo ThinkSystem 5.8TB (6x 960GB, 2.5", SSD) Drive Pack	4
CTO only	B90T	Lenovo ThinkSystem 10.8TB (6x 1.8TB, 2.5", SAS 10K HDD) Drive Pack	4
CTO only	BX12	Lenovo ThinkSystem 14.4TB (6x 2.4TB, 2.5", SAS 10K HDD) Drive Pack	4
CTO only	B90U	Lenovo ThinkSystem 23TB (6x 3.84TB, 2.5", SSD) Drive Pack	4
CTO only	B90W	Lenovo ThinkSystem 46.1TB (6x 7.68TB, 2.5", SSD) Drive Pack	4
CTO only	B90Z	Lenovo ThinkSystem 92.2TB (6x 15.36TB, 2.5", SSD) Drive Pack	4

Software

In this section:

- Feature bundles
- ONTAP software versions
- Upgrading to Unified Premium ONTAP
- Ansible playbooks for DM Series

ONTAP software unifies data management across flash, disk, and cloud to simplify the Lenovo DM storage environment. It builds the foundation for a Data Fabric, making it easy to move the data where it is needed across flash, disk, and cloud resources.

Feature bundles

Controller software for the DM5000H is available in the following bundles of features:

- SAN Base (China only) (Feature BKKC) (only available with 3-year models, machine type 7D7V)
- SAN Premium (Feature BKKE) (China only, and only available with 3-year models, machine type 7D7V)
- Unified Fundamentals (All markets except China) (Feature B72U)
- Unified Essentials (China only) (Feature BWU9)
- Unified Complete (Feature BWU8)

The following table summarizes the features in each bundle for the DM5000H.

Table 17. Comparison of software features for the DM5000H

Feature	SAN Base (PRC only)	SAN Premium (PRC only)†	Unified Fundamentals (ISO)	Unified Essentials (PRC only)	Unified Complete (WW)
Controller software feature code	BKKC	BKKE	B72U	BWU9	BWU8
RAID-4, RAID-DP, and RAID-TEC data protection	Included	Included	Included	Included	Included
SAN (Block access): iSCSI, FC, NVMe/FC	Included	Included	Included	Included	Included
NAS (File access): NFS, CIFS/SMB	No	No	Included	Included	Included
Thin provisioning	Included	Included	Included	Included	Included

Feature	SAN Base (PRC only)	SAN Premium (PRC only)†	Unified Fundamentals (ISO)	Unified Essentials (PRC only)	Unified Complete (WW)
Compression	Included	Included	Included	Included	Included
Deduplication	Included	Included	Included	Included	Included
Snapshots	Included	Included	Included	Included	Included
Encryption*	No	Included*	Included*	No	Included*
Balanced placement	Included	Included	Included	Included	Included
Dynamic capacity expansion	Included	Included	Included	Included	Included
Adaptive Quality of Service	Included	Included	Included	Included	Included
SnapRestore	Included	Included	Included	Included	Included
FlexClone	Included	Included	Included	Included	Included
FlexVol	Included	Included	Included	Included	Included
FlexCache	No	No	Included	Included	Included
SnapMirror asynchronous replication	No	Included	Included	No	Included
SyncMirror data protection	Included	Included	Included	Included	Included
Trusted Platform Module (TPM) support	No	No	Included	No	Included †
MetroCluster IP	Included	Included	Included	Included	Included
NVMe over FC Protocol	No	No	No	No	No
NVMe over TCP Protocol	Included	Included	Included	Included	Included
SnapMirror synchronous replication	No	Included	No	No	Included
FlexGroup	No	No	Included	Included	Included
SnapVault disk-based storage backup	No	No	No	No	Included
SnapCenter	No	Included	No	No	Included
ONTAP S3	No	No	Included	Included	Included
ONTAP S3 SnapMirror	No	No	No	No	Included
SnapLock data protection	No	No	No	No	Included
Multitenant Key Magement	No	No	No	No	Included
Autonomous Ransomware Protection (ARP)	No	No	No	No	Included
SnapMirror Cloud	No	No	No	No	Included
FabricPool object storage tiering	Optional	Optional	Optional	Optional	Optional

* Requires the encryption version of ONTAP. See the ONTAP software section
† Not available in PRC
The features are summarized as follows:

- **RAID-4, RAID-DP, and RAID-TEC data protection**: Provides the flexibility to choose the level of data protection required and helps improve performance and availability with built-in spare capacity and by distributing data across all physical drives in the aggregate, sustaining to up to one (RAID-4), two (RAID-DP), or three (RAID-TEC) concurrent drive failures.
- **Thin provisioning**: Optimizes efficiency by allocating storage space based on the minimum space required by each application at any given time, so that applications consume only the space they are actually using, not the total space that has been allocated to them, which allows customers to purchase storage they need today and add more as application requirements grow.
- **Compression:** Provides transparent inline and post-process data compression to reduce the amount of storage that customers need to purchase and manage.
- **Deduplication:** Performs general-purpose deduplication for removal of redundant data to reduce the amount of storage that customers need to purchase and manage.

- **Snapshots**: Enables creation of read-only copies of data for backup, parallel processing, testing, and development, and have the copies available almost immediately.
- **Encryption:** Provides software-based encryption for data at rest for enhanced data security with the traditional drives and embedded key management (requires the encryption-capable version of the ONTAP software).
- **Balanced placement:** Provides automated workload distribution across the cluster to help increase utilization and performance.
- **Dynamic capacity expansion:** Allows the capacity of a volume or aggregate to be expanded by adding new physical drives.
- **Adaptive Quality of Service:** Simplifies operations and maintains consistent workload performance by defining QoS policies and automatically adjusting storage resources to respond to workload changes.
- **SnapRestore:** Enables quick recovery of data by reverting a local volume or file to its previous state from a particular snapshot copy stored on the file system.
- **FlexClone:** References snapshot metadata to create writable point-in-time copies of a volume.
- **FlexVol:** Provides abstraction layer between the logical volume and its physical location in the storage array.
- **FlexCache:** Speeds up access to data and offloads traffic from heavily accessed volumes for read-intensive workloads by placing frequently used data in cache locally or remotely (closer to the point of client access) and serving the data to the clients directly from cache without accessing the data source.
- **SnapMirror asynchronous replication:** Provides storage system-based data replication between the storage systems containing source (local) and destination (remote) volumes by using asynchronous (at specified regular intervals) data transfers over IP communication links.
- **SyncMirror data protection:** Adds extra level of data protection and availability by mirroring a pair of RAID aggregates.
- **Trusted Platform Module (TPM)**: For encryption enabled systems. The encryption keys for the onboard key manager (OKM) are no longer stored in the boot device, but instead are stored in the physical TPM for systems so equipped, offering greater security and protection. Moving to the TPM is a nondisruptive process.
- **MetroCluster IP:** Provides storage system-based clustering with online, real-time data mirroring between the local and remote sites by using synchronous data transfers over IP communication links to deliver continuous availability with zero RPO and near-zero RTO. All storage systems in a MetroCluster IP configuration must be of the same model. New to ONTAP 9.11: MetroCluster with Storage Virtual Machine Disaster Recovery (SVM-DR) can now use a third site for the SVM-DR
- **NVMe over TCP Protocol**: Enables NVMe over TCP
- **Data Protection Optimized (DPO)**: Increases the amount of concurrent SnapMirror sessions per node, as well as improving SnapMirror performance to the cluster.
- **SnapMirror synchronous replication:** Provides storage system-based data replication between the storage systems containing source (local) and destination (remote) volumes by using synchronous (as soon as the data is written to the source volume)
- **FlexGroup:** Enables a single volume to span across multiple clustered storage arrays to maximize storage capacity and automate load distribution. New to ONTAP 9.11: FlexGroups can now be created as SnapLock volumes.
- **SnapVault disk-based storage backup:** Enables data stored on multiple systems to be backed up to a central, secondary system quickly and efficiently as read-only snapshot copies.
- **SnapCenter:** Provides application- and virtual machine-aware backup and restoration of data by using the Snapshots technology and leverages the SnapMirror capabilities of storage systems to provide onsite or offsite backup set mirroring for disaster recovery.

- **ONTAP S3**: Expands the DM Series unified story and allows customers to manage, block, file, and object data from one interface. Customers can now natively store data in S3 buckets onboard the DM Series.
- **ONTAP S3 SnapMirror** : Enables you to protect buckets in ONTAP S3 object stores using familiar SnapMirror mirroring and backup functionality. Requires ONTAP 9.11 or later on both source and destination clusters. Requires the Unified Premium Bundle.
- **SnapMirror Cloud**: A backup and recovery technology designed for ONTAP users who want to transition their data protection workflows to the cloud. SnapMirror Cloud is an extension to the family of SnapMirror replication technologies. While SnapMirror is frequently used for ONTAP-to-ONTAP backups, SnapMirror Cloud uses the same replication engine to transfer Snapshot copies for ONTAP to S3-compliant object storage backups.
- **Multitenant Key Management (MTKM)**: Provides the ability for individual tenants or storage virtual machines (SVMs) to maintain their own keys through KMIP for NVE. With multitenant external key management, you can centralize your organization's key management functions by department or tenant while inherently confirming that keys are not stored near the assets. This approach decreases the possibility of compromise.
- **Autonomous Ransomware Protection (ARP)**: ARP improves cyber resiliency by adopting a machine-learning model for anti-ransomware analytics that detects constantly evolving forms of ransomware with 99% accuracy and zero false. ARP's machine-learning model is pre-trained on a large dataset of files both before and after a simulated ransomware attack. This resource-intensive training is done outside ONTAP, but the learning from this training is used for the model inside ONTAP.
- **FabricPool**: FabricPool is a hybrid storage solution that uses an all flash (all SSD) aggregate as the performance tier and an object store as the external capacity tier. Data in a FabricPool is stored in a tier based on whether it is frequently accessed or not. Using a FabricPool helps you reduce storage cost without compromising performance, efficiency, or protection.
- No license is required when tiering to StorageGRID or ONTAP S3.
- **SnapLock data protection:** Creates Write-Once-Read-Many (WORM) non-rewritable, non-erasable data on hard disk drives to prevent files from being altered or deleted until a predetermined or default retention date.

ONTAP software versions

The following table lists the software selection options for the DM5000H. The table also indicates which markets each version is available in.

Table 18. Software selection

Part Number	Feature code	Description	Availability
CTO only	CCWL	Lenovo ThinkSystem Storage ONTAP 9.17 Software Encryption	All markets
CTO only	CCWM	Lenovo ThinkSystem Storage ONTAP 9.17 Software NonEncryption	All markets
CTO only	CF4S	Lenovo ThinkSystem Storage ONTAP 9.18 Software Encryption	All markets
CTO only	CF4T	Lenovo ThinkSystem Storage ONTAP 9.18 Software NonEncryption	All markets

Software maintenance is included in the DM5000H warranty and support (see Warranty and support for details).

Upgrading to Unified Premium ONTAP

To upgrade your existing ONTAP installation to Unified Premium ONTAP, use DCSC to specify the storage you already have installed, since the upgrade license is based on your existing configuration.
https://dcsc.lenovo.com/#/configuration/cto/7D4FCTO2WW?hardwareType=storage

The software license for field upgrades is ordered via the CTO base 7D4FCTO2WW, as listed in the following table.

Table 20. Feature codes for ONTAP upgrades (MTM 7D4FCTO2WW)

Feature code	Description
BNDK	Unified Fundamental to Unified Premium ONTAP Upgrade Selection
BNDJ	All SAN Premium to Unified Premium ONTAP Upgrade Selection
BNDH	All SAN Fundamental to Unified Premium ONTAP Upgrade Selection
BNKP	All SAN Base to Unified Premium CFC Selection (PRC only)
BNKN	Unified Base to Unified Premium CFC Selection (PRC only)

Ansible playbooks for DM Series

Ansible Playbooks give customers the ability to quickly deploy and use DM Series storage systems using a standard open source deployment tool. Each playbook executes a set of tasks to achieve a configuration/provisioning goal.

Lenovo has created playbooks that can be used with DM Series storage systems to help with:

- Provisioning
- Configuring

To access the Ansible Playbooks for Lenovo ThinkSystem DM Series storage systems, go to the following page:
https://github.com/lenovo/ansible-dm-series-ontap

Management

The ThinkSystem DM5000H supports the following management interfaces:

- Lenovo ThinkSystem Storage Manager, a web-based interface via HTTPS for single-system management or centralized management of the cluster of systems, that runs on the storage system itself and requires only a supported browser (Microsoft Internet Explorer, Google Chrome, or Mozilla Firefox), so there is no need for a separate console or plug-in.
- Command line interface (CLI) via SSH or through serial console.
- Syslog, SNMP, and e-mail notifications.
- Optional Lenovo XClarity for discovery, inventory, monitoring, and alerts.

Power supplies and cables

The ThinkSystem DM5000H, DM240S 2U24 SFF, and DM120S LFF enclosures ship with two redundant hot-swap 913 W (100 - 240 V) Platinum AC power supplies, each with an IEC 320-C14 connector.

The ThinkSystem DM600S 4U60 LFF expansion enclosures ship with two redundant hot-swap 2325 W (200 - 240 V) Platinum AC power supplies, each with an IEC 320-C20 connector.

Each ThinkSystem DM Series enclosure requires the selection of two power cables.

The following table lists the rack power cable and line cord options that can be ordered for the DM5000H, DM240S 2U24 SFF, and DM120S 2U12 LFF enclosures (two power cords per enclosure).

Table 21. Power cables for DM5000H, DM240S 2U24 SFF, and DM120S 2U12 LFF enclosures

Description	Part number	Feature code
Rack power cables		
1.0m, 10A/100-250V, C13 to IEC 320-C14 Rack Power Cable	00Y3043	A4VP
1.0m, 13A/100-250V, C13 to IEC 320-C14 Rack Power Cable	4L67A08367	B0N5
1.2m, 16A/100-250V, 2 Short C13s to Short C20 Rack Power Cable	47C2491	A3SW
1.5m, 10A/100-250V, C13 to IEC 320-C14 Rack Power Cable	39Y7937	6201
1.5m, 13A/100-250V, C13 to IEC 320-C14 Rack Power Cable	4L67A08368	B0N6
2.0m, 10A/100-250V, C13 to IEC 320-C14 Rack Power Cable	4L67A08365	B0N4
2.0m, 13A/125V-10A/250V, C13 to IEC 320-C14 Rack Power Cable	4L67A08369	6570
2.5m, 16A/100-250V, 2 Long C13s to Short C20 Rack Power Cable	47C2492	A3SX
2.8m, 10A/100-250V, C13 to IEC 320-C14 Rack Power Cable	4L67A08366	6311
2.8m, 13A/125V-10A/250V, C13 to IEC 320-C14 Rack Power Cable	4L67A08370	6400
2.8m, 10A/100-250V, C13 to IEC 320-C20 Rack Power Cable	39Y7938	6204
2.8m, 16A/100-250V, 2 Short C13s to Long C20 Rack Power Cable	47C2493	A3SY
4.1m, 16A/100-250V, 2 Long C13s to Long C20 Rack Power Cable	47C2494	A3SZ
4.3m, 10A/100-250V, C13 to IEC 320-C14 Rack Power Cable	39Y7932	6263
4.3m, 13A/125V-10A/250V, C13 to IEC 320-C14 Rack Power Cable	4L67A08371	6583
Line cords		
Argentina 2.8m, 10A/250V, C13 to IRAM 2073 Line Cord	39Y7930	6222
Argentina 4.3m, 10A/250V, C13 to IRAM 2073 Line Cord	81Y2384	6492
Australia/New Zealand 2.8m, 10A/250V, C13 to AS/NZS 3112 Line Cord	39Y7924	6211
Australia/New Zealand 4.3m, 10A/250V, C13 to AS/NZS 3112 Line Cord	81Y2383	6574
Brazil 2.8m, 10A/250V, C13 to NBR 14136 Line Cord	69Y1988	6532
Brazil 4.3m, 10A/250V, C13 to NBR14136 Line Cord	81Y2387	6404
China 2.8m, 10A/250V, C13 to GB 2099.1 Line Cord	39Y7928	6210
China 4.3m, 10A/250V, C13 to GB 2099.1 Line Cord	81Y2378	6580
Denmark 2.8m, 10A/250V, C13 to DK2-5a Line Cord	39Y7918	6213
Denmark 4.3m, 10A/250V, C13 to DK2-5a Line Cord	81Y2382	6575
Europe 2.8m, 10A/250V, C13 to CEE7-VII Line Cord	39Y7917	6212
Europe 4.3m, 10A/250V, C13 to CEE7-VII Line Cord	81Y2376	6572
India 2.8m, 10A/250V, C13 to IS 6538 Line Cord	39Y7927	6269
India 4.3m, 10A/250V, C13 to IS 6538 Line Cord	81Y2386	6567

Description	Part number	Feature code
Israel 2.8m, 10A/250V, C13 to SI 32 Line Cord	39Y7920	6218
Israel 4.3m, 10A/250V, C13 to SI 32 Line Cord	81Y2381	6579
Italy 2.8m, 10A/250V, C13 to CEI 23-16 Line Cord	39Y7921	6217
Italy 4.3m, 10A/250V, C13 to CEI 23-16 Line Cord	81Y2380	6493
Japan 2.8m, 12A/125V, C13 to JIS C-8303 Line cord	46M2593	A1RE
Japan 2.8m, 12A/250V, C13 to JIS C-8303 Line Cord	4L67A08357	6533
Japan 4.3m, 12A/125V, C13 to JIS C-8303 Line Cord	39Y7926	6335
Japan 4.3m, 12A/250V, C13 to JIS C-8303 Line Cord	4L67A08362	6495
Korea 2.8m, 12A/250V, C13 to KS C8305 Line Cord	39Y7925	6219
Korea 4.3m, 12A/250V, C13 to KS C8305 Line Cord	81Y2385	6494
South Africa 2.8m, 10A/250V, C13 to SABS 164 Line Cord	39Y7922	6214
South Africa 4.3m, 10A/250V, C13 to SABS 164 Line Cord	81Y2379	6576
Switzerland 2.8m, 10A/250V, C13 to SEV 1011-S24507 Line Cord	39Y7919	6216
Switzerland 4.3m, 10A/250V, C13 to SEV 1011-S24507 Line Cord	81Y2390	6578
Taiwan 2.8m, 10A/250V, C13 to CNS 10917-3 Line Cord	81Y2375	6317
Taiwan 2.8m, 15A/125V, C13 to CNS 10917-3 Line Cord	81Y2374	6402
Taiwan 4.3m, 10A/250V, C13 to CNS 10917-3 Line Cord	81Y2389	6531
Taiwan 4.3m, 15A/125V, C13 to CNS 10917-3 Line Cord	81Y2388	6530
United Kingdom 2.8m, 10A/250V, C13 to BS 1363/A Line Cord	39Y7923	6215
United Kingdom 4.3m, 10A/250V, C13 to BS 1363/A Line Cord	81Y2377	6577
United States 2.8m, 10A/125V, C13 to NEMA 5-15P Line Cord	90Y3016	6313
United States 2.8m, 10A/250V, C13 to NEMA 6-15P Line Cord	46M2592	A1RF
United States 2.8m, 13A/125V, C13 to NEMA 5-15P Line Cord	00WH545	6401
United States 4.3m, 10A/125V, C13 to NEMA 5-15P Line Cord	4L67A08359	6370
United States 4.3m, 10A/250V, C13 to NEMA 6-15P Line Cord	4L67A08361	6373
United States 4.3m, 13A/125V, C13 to NEMA 5-15P Line Cord	4L67A08360	AX8A

The following table lists the rack power cable and line cord options that can be ordered for the DM600S 4U60 LFF expansion enclosures (two power cords per enclosure).

Table 22. Power cables for DM600S 4U60 enclosures

Description	Part number	Feature code
Rack power cables		
2.5m, 16A/100-250V, C19 to IEC 320-C20 Rack Power Cable	39Y7916	6252
Line cords		
Argentina 4.3m, 16A/250V, C19 to IRAM 2073 Line Cord	40K9777	6276
Australia/New Zealand 4.3m, 15A/250V, C19 to AS/NZS 3112 Line Cord	40K9773	6284
Brazil 4.3m, 16A/250V, C19 to NBR 14136 Line Cord	40K9775	6277
China 4.3m, 16A/250V, C19 to GB2099.1 Line Cord	40K9774	6288
Denmark/Switzerland 4.3m, 16A/250V, C19 to IEC 309 P+N+G Line Cord	40K9769	6283
Europe 4.3m, 16A/250V, C19 to CEE7-VII Line Cord	40K9766	6279
India 4.3m, 16A/250V, C19 to IS6538 Line Cord	40K9776	6285
Israel 4.3m, 16A/250V, C19 to SI 32 Line Cord	40K9771	6282
Italy 4.3m, 16A/250V, C19 to CEI 23-16 Line Cord	40K9768	6281
Japan 4.3m, 15A/200V, C19 to JIS C-8303 Line Cord	41Y9233	6291
Korea 4.3m, 15A/250V, C19 to KSC 8305 Line Cord	41Y9231	6289
South Africa 4.3m, 16A/250V, C19 to SABS 164 Line Cord	40K9770	6280
Switzerland 4.3m, 16A/250V, C19 to SEV 1011 Line Cord	81Y2391	6549
Taiwan 4.3m, 16A/250V, C19 to CNS 10917-3 Line Cord	41Y9230	6287
United Kingdom 4.3m, 13A/250V, C19 to BS 1363/A Line Cord	40K9767	6278
United States 4.3m, 15A/250V, C19 to NEMA 6-15P Line Cord	00D7197	A1NV
United States 4.3m, 18A/250V, C19 to NEMA L6-20P Line Cord	40K9772	6275

Rack installation

The individually shipped ThinkSystem DM5000H, DM240S, and DM600S enclosures come with the ThinkSystem Storage Rack Mount Kit 2U24/4U60, and the individually shipped ThinkSystem DM120S enclosures come with the ThinkSystem Storage Rack Mount Kit 2U12. The rack mount kits are listed in the following table.

Table 23. 4-post rack mount kits

Description	Feature code	Quantity
Lenovo ThinkSystem Storage Rack Mount Kit 2U12	B38X	1
Lenovo ThinkSystem Storage Rack Mount Kit 2U24/4U60	B38Y	1

When the ThinkSystem DM Series enclosures are factory-integrated and shipped installed in a rack cabinet, the rack mount kits that support Ship-in-Rack (SIR) capabilities are derived by the configurator.

The SIR-capable rack mount kits are listed in the following table.

Table 24. 4-post SIR rack mount kits

Description	Feature code	Quantity
Lenovo ThinkSystem Storage Rack Mount Kit 2U12	B38X	1
Lenovo ThinkSystem Storage SIR Rack Mount Kit (for 2U24 enclosures)	B6TH	1
DM/DE 4U Adjustable Rail Kit (SIR)	B742	1

The following table summarizes the rack mount kit features and specifications.

Table 25. Rack mount kit features and specifications summary

	Screw-in fixed rail with adjustable depth			
Attribute	**2U12**	**2U24/4U60**	**2U24 SIR**	**4U SIR**
Feature code	B38X	B38Y	B6TH	B742
Enclosure support	DM120S	DM5000H DM240S DM600S‡	DM5000H DM240S	DM600S‡
Rail type	Fixed (static) with adjustable depth	Fixed (static) with adjustable depth	Fixed (static) with adjustable depth	Fixed (static) with adjustable depth
Tool-less installation	No	No	No	No
In-rack maintenance	Yes*	Yes*	Yes*	Yes*
Ship-in-rack (SIR) support	Yes	No	Yes	Yes
1U PDU support	Yes	Yes	Yes	Yes
0U PDU support	Limited**	Limited**	Limited**	Limited**
Rack type	IBM or Lenovo 4-post, IEC standard-compliant	IBM or Lenovo 4-post, IEC standard-compliant	IBM or Lenovo 4-post, IEC standard-compliant	IBM or Lenovo 4-post, IEC standard-compliant
Mounting holes	Square or round	Square or round	Square or round	Square or round
Mounting flange thickness	2 mm (0.08 in.) – 3.3 mm (0.13 in.)	2 mm (0.08 in.) – 3.3 mm (0.13 in.)	2 mm (0.08 in.) – 3.3 mm (0.13 in.)	2 mm (0.08 in.) – 3.3 mm (0.13 in.)
Distance between front and rear mounting flanges^	605 mm (23.8 in.) – 812.8 mm (32 in.)	605 mm (23.8 in.) – 812.8 mm (32 in.)	605 mm (23.8 in.) – 812.8 mm (32 in.)	605 mm (23.8 in.) – 812.8 mm (32 in.)

‡ The rack cabinet must be at least 1100 mm (43.31 in.) deep for 4U60 enclosures.
* The majority of the enclosure components can be serviced from the front or rear of the enclosure, which does not require the

removal of the enclosure from the rack cabinet.
** If a 0U PDU is used, the rack cabinet must be at least 1000 mm (39.37 in.) deep for 2U12 and 2U24 enclosures, or at least 1200 mm (47.24 in.) deep for 4U60 enclosures.
^ Measured when mounted on the rack, from the front surface of the front mounting flange to the rear most point of the rail.

Physical specifications

The ThinkSystem DM5000H controller enclosure has the following dimensions and weight (approximate):

- Height: 85 mm (3.4 in.)
- Width: 447 mm (17.6 in.)
- Depth: 483 mm (19.0 in.)
- Weight (fully configured): 27.6 kg (60.8 lb)

The ThinkSystem DM240S 2U24 SFF enclosures have the following dimensions and weight (approximate):

- Height: 85 mm (3.4 in.)
- Width: 449 mm (17.7 in.)
- Depth: 484 mm (19.1 in.)
- Weight (fully configured): 24.4 kg (53.8 lb)

The ThinkSystem DM120S 2U12 LFF enclosures have the following dimensions and weight (approximate):

- Height: 85 mm (3.4 in.)
- Width: 447 mm (17.6 in.)
- Depth: 483 mm (19.0 in.)
- Weight (fully configured): 28.7 kg (63.3 lb)

The ThinkSystem DM600S 4U60 LFF enclosures have the following dimensions and weight (approximate):

- Height: 174 mm (6.9 in.)
- Width: 449 mm (17.7 in.)
- Depth: 922 mm (36.3 in.)
- Weight (fully configured): 111.5 kg (245.8 lb)

Operating environment

The ThinkSystem DM5000H and DM240S 2U24 SFF enclosures are supported in the following environment:

- Air temperature:
  - Operating:
    - DM5000H and DM240S 2U24 SFF: 5 °C - 45 °C (41 °F - 113 °F)
    - DM120S 2U12 LFF and DM600S 4U60 LFF: 10 °C - 40 °C (50 °F - 104 °F)
  - Non-operating: -40 °C - +70 °C (-40 °F - 158 °F)
  - Maximum altitude: 3050 m (10,000 ft)
- Relative humidity:
  - Operating: 8% - 90% (non-condensing)
  - Non-operating: 10% - 95% (non-condensing)
- Electrical power:
  - DM5000H
    - 100 to 127 (nominal) V AC; 50 Hz or 60 Hz; 5.35 A
    - 200 to 240 (nominal) V AC; 50 Hz or 60 Hz; 2.67 A
    - Maximum system power load: 508 W
  - DM240S 2U24 SFF
    - 100 to 127 (nominal) V AC; 50 Hz or 60 Hz; 4.11 A
    - 200 to 240 (nominal) V AC; 50 Hz or 60 Hz; 2.05 A
    - Maximum system power load: 390 W
  - DM120S 2U12 LFF
    - 100 to 127 (nominal) V AC; 50 Hz or 60 Hz; 3.56 A

        - 200 to 240 (nominal) V AC; 50 Hz or 60 Hz; 1.78 A
        - Maximum system power load: 338 W
    - DM600S 4U60 LFF
        - 200 to 240 (nominal) V AC; 50 Hz or 60 Hz; 8.11 A
        - Maximum system power load: 1541 W

- Heat dissipation:
    - DM5000H: 1733 BTU/hour
    - DM240S 2U24 SFF: 1331 BTU/hour
    - DM120S 2U12 LFF: 1153 BTU/hour
    - DM600S 4U60 LFF: 5258 BTU/hour

- Acoustical noise emission:
    - DM5000H: 6.9 bels
    - DM240S 2U24 SFF: 6.9 bels
    - DM120S 2U12 LFF: 6.3 bels
    - DM600S 4U60 SFF: 7.2 bels

Warranty upgrades and post-warranty support

The DM5000H and expansion enclosures have a 1-year or 3-year warranty based on the machine type of the system, as listed in the following table.

Table 26. Duration of standard warranty

System	Machine type 1 year warranty	Machine type 3 year warranty
DM5000H controller enclosure	7Y57	7D7V
DM120S 2U12 LFF Expansion Enclosure	7Y59	7D7X
DM240S 2U24 SFF Expansion Enclosure	7Y58	7D7Y
DM600S 4U60 LFF Expansion Enclosure	7Y43	7D7Z

Our global network of regional support centers offers consistent, local-language support enabling you to vary response times and level of service to match the criticality of your support needs:

- **Standard Next Business Day** – Best choice for non-essential systems requiring simple maintenance.
- **Premier Next Business Day** – Best choice for essential systems requiring technical expertise from senior-level Lenovo Engineers.
- **Premier 24x7 4-Hour Response** – Best choice for systems where maximum uptime is critical.
- **Premier Support Plus 24x7 4-Hour Response** – Best choice for systems where maximum uptime is critical.

For more information, consult our Lenovo Operational Support Services for Data Centers Services Brochure.

Note: Some warranty upgrades may not be available in all markets or regions. For more information, go to https://lenovolocator.com/. For information about Lenovo warranty upgrade offerings that are available in your region, contact your local Lenovo sales representative or business partner.

Services

Lenovo Infrastructure Services empower you at every stage of your IT lifecycle. From expert advisory and strategic planning to seamless deployment and ongoing support, we ensure your infrastructure is built for success. Our comprehensive services accelerate time to value, minimize downtime, and free your IT staff to focus on driving innovation and business growth.

Note: Some service options may not be available in all markets or regions. For more information, go to https://lenovolocator.com/. For information about Lenovo service upgrade offerings that are available in your region, contact your local Lenovo sales representative or business partner.

In this section:

- Lenovo Advisory Services
- Lenovo Implementation Services
- Infrastructure Deployment Services
- Lenovo Support Services
- Lenovo Managed Services
- Lenovo Sustainability Services

Lenovo Advisory Services

Lenovo Advisory Services simplify the planning process, enabling customers to build future-proofed

strategies in as little as six weeks. Consultants provide guidance on projects including VM migration, storage, backup and recovery, and cost management to accelerate time to value, improve cost efficiency, and build a flexibly scalable foundation.

- **Assessment Services**

  An Assessment helps solve your IT challenges through an onsite, multi-day session with a Lenovo technology expert. We perform a tools-based assessment which provides a comprehensive and thorough review of a company's environment and technology systems. In addition to the technology-based functional requirements, the consultant also discusses and records the non-functional business requirements, challenges, and constraints. Assessments help organizations like yours, no matter how large or small, get a better return on your IT investment and overcome challenges in the ever-changing technology landscape.

Lenovo Implementation Services

Optimize your IT operations by shifting labor-intensive functions to Lenovo's skilled technicians for seamless on-site or remote deployment, configuration, and migration. Enjoy peace of mind, faster time to value, and comprehensive knowledge sharing with your IT staff, backed by our best-practice methodology.

Infrastructure Configuration Services

- **Factory Integrated Services**

  A suite of value-added offerings provided during the manufacturing phase of a server or storage system that reduces time to value. These services aim at improving your hardware deployment experience and enhance the quality of a standard configuration before it arrives at your facility.

Infrastructure Deployment Services

Lenovo Infrastructure Deployment Services help you move from hardware delivery toward production with the planning, installation, configuration, integration, validation, documentation, and operational handoff support your project requires. Choose from clearly defined Premier Deploy for Infrastructure options, Specialized Deployment Services, or Hardware Installation Services based on your platform, project complexity, internal IT capabilities, and desired level of assurance.

For more information, consult our Lenovo Infrastructure Deployment Services Catalog.

- **Premier Deploy for Infrastructure**

  Clearly defined deployment options for eligible ThinkSystem servers, ThinkSystem storage arrays, and ThinkAgile solutions.

  Table 27. Premier Deploy for Infrastructure

	Standard Deploy	**Premier Deploy**	**Premier Deploy Plus**
Choose when:	You need straightforward physical hardware installation and customer acceptance.	You need operating system installation and/or system configuration, integration and validation.	You need extended post-deployment assurance and visibility after implementation.
You gain:	An installed, accepted, and documented hardware foundation.	A validated, integrated environment ready to move into production.	Added assurance as your team transitions into ongoing operations.

  For more information, see the Premier Deploy for Infrastructure 1-pager.

- **Specialized Deployment Services**

  Focused deployment expertise for specific technologies or project requirements when Premier Deploy for Infrastructure is not supported or is not the right fit for your project. Services can support ThinkSystem storage arrays, ThinkAgile solutions, HPC, liquid cooling, and private cloud environments through activities such as readiness planning, configuration, integration, validation, documentation, knowledge transfer, and operational handoff, as applicable. Availability and scope vary by platform, project requirements, geography, and service scope.

- **Hardware Installation Services**

  Expert physical installation for eligible hardware outside the Premier Deploy for Infrastructure scope, or for projects that require installation only.

- **Hardware Installation Plus**

  Extends Hardware Installation Services with:

  - RAID configuration
  - Supported operating system installation
  - Driver-level verification

Lenovo Support Services

In addition to response time options for hardware parts, repairs, and labor, Lenovo offers a wide array of additional support services to ensure your business is positioned for success and longevity. Our goal is to reduce your capital outlays, mitigate your IT risks, and accelerate your time to productivity.

- **Premier Support for Infrastructure**

  Helps you build business resilience with expert-led support, responsive issue resolution, and coordinated troubleshooting across supported Lenovo server and storage environments. Direct access to Lenovo expertise and accountable end-to-end case ownership help reduce disruption and simplify ongoing infrastructure operations.

- **Premier Support Plus for Infrastructure**

  Gain all the benefits of Premier Support for Infrastructure, with proactive and predictive support capabilities, designated account oversight, preventative maintenance guidance, and Keep Your Drive to help identify potential issues earlier, plan service more effectively, and maintain control of sensitive data.

- **Committed Service Repair (CSR)**

  Our commitment to ensuring the fastest, most seamless resolution times for mission-critical systems that require immediate attention to ensure minimal downtime and risk for your business. This service is only available for machines under the Premier 4-Hour Response SLA.

- **Multivendor Support Services (MVS)**

  Your single point of accountability for resolution support across a vast range of leading Server, Storage, and Networking OEMs, allowing you to manage all your supported infrastructure devices seamlessly from a single source.

- **Keep Your Drive (KYD)**

  Protect sensitive data and maintain compliance with corporate retention and disposal policies to ensure your data is always under your control, regardless of the number of drives that are installed in your Lenovo server.

- **Technical Account Manager (TAM)**

  Your single point of contact to expedite service requests, provide status updates, and furnish reports to track incidents over time, ensuring smooth operations and optimized performance as your business grows.

- **Enterprise Software Support (ESS)**

  Gain comprehensive, single-source, and global support for a wide range of server operating systems and Microsoft server applications.

For more information, consult our Lenovo Operational Support Services for Data Centers Services Brochure.

Lenovo Managed Services

Achieve peak efficiency, high security, and minimal disruption with Lenovo's always-on Managed Services. Our real-time monitoring, 24x7 incident response, and problem resolution ensure your infrastructure operates seamlessly. With quarterly health checks for ongoing optimization and innovation, Lenovo's remote active monitoring boosts end-user experience and productivity by keeping your data center's hardware performing at its best.

- **Managed Services**

  Lenovo Managed Services provides continuous 24x7 remote monitoring (plus 24x7 call center availability) and proactive management of your data center using state-of-the-art tools, systems, and practices by a team of highly skilled and experienced Lenovo services professionals.

  Quarterly reviews check error logs, verify firmware & OS device driver levels, and software as needed. We'll also maintain records of the latest patches, critical updates, and firmware levels, to ensure your systems are providing business value through optimized performance.

Lenovo Sustainability Services

Lenovo Sustainability Services helps you address sustainability priorities across the IT lifecycle, from offsetting emissions associated with device purchases and extending equipment life to securely managing assets at end of life. Together, these services support more circular IT practices while helping you protect data, manage costs, and recover value from technology investments.

- **Asset Recovery Services**

  Lenovo Asset Recovery Services (ARS) provides a secure, seamless solution for managing end-of-life IT assets, ensuring data is safely sanitized while contributing to a more circular IT lifecycle. By maximizing the reuse or responsible recycling of devices, ARS helps businesses meet sustainability goals while recovering potential value from their retired equipment. For more information, see the Simplify IT Asset Recovery page.

- **CO2 Offset Services**

  Lenovo's CO2 Offset Services offer a simple and transparent way for businesses to take tangible action on their IT footprint. By integrating CO2 offsets directly into device purchases, customers can easily support verified climate projects and track their contributions, making meaningful progress toward their sustainability goals without added complexity.

- **Lenovo Certified Refurbished**

  Lenovo Certified Refurbished offers a cost-effective way to support IT circularity without compromising on quality and performance. Each device undergoes rigorous testing and certification, ensuring reliable performance and extending its lifecycle. With Lenovo's trusted certification, you gain peace of mind while making a more sustainable IT choice.

Lenovo TruScale

Lenovo TruScale XaaS is your set of flexible IT services that makes everything easier. Streamline IT procurement, simplify infrastructure and device management, and pay only for what you use – so your business is free to grow and go anywhere.

Lenovo TruScale is the unified solution that gives you simplified access to:

- The industry's broadest portfolio – from pocket to cloud – all delivered as a service
- A single-contract framework for full visibility and accountability
- The global scale to rapidly and securely build teams from anywhere
- Flexible fixed and metered pay-as-you-go models with minimal upfront cost
- The growth-driving combination of hardware, software, infrastructure, and solutions – all from one single provider with one point of accountability.

For information about Lenovo TruScale offerings that are available in your region, contact your local Lenovo sales representative or business partner.

Regulatory compliance

The ThinkSystem DM Series enclosures conform to the following regulations:

- United States: FCC Part 15, Class A; UL 60950-1
- Canada: ICES-003, Class A; CAN/CSA-C22.2 60950-1
- Mexico NOM
- European Union: CE Mark (EN55032 Class A, EN55024, IEC/EN60950-1); ROHS Directive 2011/65/EU
- Russia, Kazakhstan, Belarus: EAC
- China: CCC GB 4943.1, GB 17625.1, GB 9254 Class A; CELP; CECP
- Japan: VCCI, Class A
- Taiwan: BSMI CNS 13438, Class A; CNS 14336-1
- Korea KN32/35, Class A
- Australia/New Zealand: AS/NZS CISPR 22 Class A

Interoperability

Lenovo provides end-to-end storage compatibility testing to deliver interoperability throughout the network. The ThinkSystem DM5000H Unified Hybrid Storage Array supports attachment to Lenovo servers by using NAS (NFS and CIFS/SMB), iSCSI, and Fibre Channel storage connectivity protocols.

For end-to-end storage configuration support, refer to the Lenovo Storage Interoperation Center (LSIC): https://datacentersupport.lenovo.com/us/en/lsic

Use the LSIC to select the known components of your configuration and then get a list all other supported combinations, with details about supported hardware, firmware, operating systems, and drivers, plus any additional configuration notes. View results on screen or export them to Excel.

Cluster interconnect

The following table lists the Ethernet storage switch that can be used with the ThinkSystem DM5000H Unified Hybrid Storage Array for cluster interconnect configurations.

Table 28. Ethernet storage switch

Description	Part number
Mellanox SN2100 16 Port, QSFP28, 100GbE Switch, Rear to Front (PSE) Exhaust**	7DBUCTO1WW
Mellanox SN2100 16 port, QSFP28, 100GbE Switch, Front to Rear (oPSE) Exhaust**	7DBUCTO2WW

**The SN2100 switch can be used with the ThinkSystem DM5000H Unified Hybrid Storage Array for cluster interconnect.

For more information, see the NVIDIA SN2100 16-port 100Gb Ethernet Storage Switch Article: https://lenovopress.lenovo.com/lp1756-nvidia-sn2100-100gb-ethernet-storage-switch

Fibre Channel SAN switches

Lenovo offers the ThinkSystem DB Series of Fibre Channel SAN switches for high-performance storage expansion. See the DB Series product guides for models and configuration options:

- ThinkSystem DB Series SAN Switches: https://lenovopress.com/storage/switches#rt=product-guide

Rack cabinets

The following table lists the supported rack cabinets.

Table 29. Rack cabinets (D)

Model	Description
7D6DA007WW	ThinkSystem 42U Onyx Primary Heavy Duty Rack Cabinet (1200mm)
7D6DA008WW	ThinkSystem 42U Pearl Primary Heavy Duty Rack Cabinet (1200mm)
7D6EA009WW	ThinkSystem 48U Onyx Primary Heavy Duty Rack Cabinet (1200mm)
7D6EA00AWW	ThinkSystem 48U Pearl Primary Heavy Duty Rack Cabinet (1200mm)
93074RX	42U Standard Rack (1000mm)
93604PX	42U 1200mm Deep Dynamic Rack
93614PX	42U 1200mm Deep Static Rack
93634PX	42U 1100mm Dynamic Rack
93634EX	42U 1100mm Dynamic Expansion Rack

For specifications about these racks, see the Lenovo Rack Cabinet Reference, available from: https://lenovopress.com/lp1287-lenovo-rack-cabinet-reference

For more information, see the list of Product Guides in the Rack cabinets category: https://lenovopress.com/servers/options/racks

Power distribution units

The following table lists the power distribution units (PDUs) that are offered by Lenovo.

Table 30. Power distribution units

Part number	Feature code	Description	ANZ	ASEAN	Brazil	EET	MEA	RUCIS	WE	HTK	INDIA	JAPAN	LA	NA	PRC
0U Basic PDUs															
4PU7A93176	C0DA	0U 36 C13 and 6 C19 Basic 32A 1 Phase PDU	Y	Y	Y	Y	Y	Y	Y	Y	Y	N	Y	Y	Y
4PU7A93177	C0D9	0U 24 C13/C15 and 24 C13/C15/C19 Basic 32A 3 Phase WYE PDU v2	Y	Y	Y	Y	Y	Y	Y	Y	Y	Y	Y	Y	Y
0U Monitored PDUs															
4PU7B08150	CD17	0U 3 C13 and 18 C19 Monitored 80A 3 Phase WYE PDU	N	N	N	N	N	N	N	N	N	N	N	Y	N
4PU7B08148	CD15	0U 3 C13 and 18 C19 Monitored 48A 3 Phase WYE PDU	N	N	N	N	N	N	N	N	N	N	N	Y	N
4PU7B08149	CD16	0U 3 C13 and 18 C19 Monitored 63A 3 Phase WYE PDU	N	N	N	Y	N	N	Y	Y	N	N	N	N	N
4PU7B08151	CD18	0U 21 Saf-D-Grid 300 Monitored 80A 3 Phase WYE High Voltage PDU	N	N	N	N	N	N	N	N	N	N	N	Y	N
0U Switched and Monitored PDUs															
4PU7A93181	C0D5	0U 21 C13/C15 and 21 C13/C15/C19 Switched and Monitored 60A 3 Phase Delta PDU v2	N	Y	N	N	Y	N	N	Y	N	Y	N	Y	N
4PU7A93178	C0D8	0U 20 C13 and 4 C19 Switched and Monitored 32A 1 Phase PDU	Y	Y	Y	Y	Y	Y	Y	Y	Y	N	Y	Y	Y
4PU7A93182	C0CS	0U 18 C13/C15 and 18 C13/C15/C19 Switched and Monitored 63A 3 Phase WYE PDU	Y	Y	Y	Y	Y	Y	Y	Y	Y	Y	Y	Y	Y
4PU7A93180	C0D6	0U 18 C13/C15 and 18 C13/C15/C19 Switched and Monitored 32A 3 Phase WYE PDU v2	Y	Y	Y	Y	Y	Y	Y	Y	Y	Y	Y	Y	Y
4PU7A93179	C0D7	0U 16 C13/C15 and 16 C13/C15/C19 Switched and Monitored 30A 1 Phase PDU v2	N	Y	N	N	N	N	N	Y	N	Y	Y	Y	N
4PU7B08152	CD19	0U 21 Saf-D-Grid 300 Switched and Monitored 80A 3 Phase WYE High Voltage PDU	N	N	N	N	N	N	N	N	N	N	N	Y	N
1U Basic PDUs															
4PU7B12339	CE6L	1U Basic 16A 1 Phase PDU	Y	Y	Y	Y	Y	Y	Y	Y	Y	N	Y	Y	Y
1U Switched and Monitored PDUs															
4PU7B13376	CJVY	1U 18 C19/C13 Switched and Monitored 48A 3 Phase WYE PDU v3	Y	Y	Y	Y	Y	Y	Y	Y	Y	Y	Y	Y	Y
4PU7A90809	C0DE	1U 18 C19/C13 Switched and monitored 48A 3P WYE PDU V2 CE	Y	Y	Y	Y	Y	Y	Y	Y	Y	Y	Y	N	Y
4PU7A90810	C0DD	1U 18 C19/C13 Switched and monitored 80A 3P Delta PDU V2	N	N	N	N	N	N	N	Y	N	Y	Y	Y	N
4PU7A90811	C0DC	1U 12 C19/C13 Switched and monitored 32A 3P WYE PDU V2	Y	Y	Y	Y	Y	Y	Y	Y	Y	Y	Y	Y	Y
4PU7A90812	C0DB	1U 12 C19/C13 Switched and monitored 60A 3P Delta PDU V2	N	N	Y	N	N	N	N	Y	N	Y	Y	Y	N
Line cords for 1U PDUs that ship without a line cord															
40K9611	6504	4.3m, 32A/380-415V, EPDU/IEC 309 3P+N+G 3ph wye (non-US) Line Cord	Y	Y	Y	Y	Y	Y	Y	Y	Y	Y	Y	Y	Y

Part number	Feature code	Description	ANZ	ASEAN	Brazil	EET	MEA	RUCIS	WE	HTK	INDIA	JAPAN	LA	NA	PRC
40K9612	6502	4.3m, 32A/230V, EPDU to IEC 309 P+N+G (non-US) Line Cord	Y	Y	Y	Y	Y	Y	Y	Y	Y	Y	Y	Y	Y
40K9613	6503	4.3m, 63A/230V, EPDU to IEC 309 P+N+G (non-US) Line Cord	Y	Y	Y	Y	Y	Y	Y	Y	Y	Y	Y	Y	Y
40K9614	6500	4.3m, 30A/208V, EPDU to NEMA L6-30P (US) Line Cord	Y	Y	Y	Y	Y	Y	Y	Y	Y	Y	Y	Y	Y
40K9615	6501	4.3m, 60A/208V, EPDU to IEC 309 2P+G (US) Line Cord	N	N	Y	N	N	N	Y	N	N	Y	Y	Y	N

For more information, see the Lenovo Press documents in the PDU category:
https://lenovopress.com/servers/options/pdu

Uninterruptible power supply units

The following table lists the uninterruptible power supply (UPS) units that are offered by Lenovo.

Table 31. Uninterruptible power supply units

Part number	Description
Rack-mounted or tower UPS units - 200-240VAC	
7DD5A002WW	RT1.5kVA 2U Rack or Tower UPS-G2 (200-240VAC)
7DD5A005WW	RT3kVA 2U Rack or Tower UPS-G2 (200-240VAC)

For more information, see the list of Product Guides in the UPS category:
https://lenovopress.com/servers/options/ups

Lenovo Financial Services

Why wait to obtain the technology you need now? No payments for 90 days and predictable, low monthly payments make it easy to budget for your Lenovo solution.

- **Flexible**

  Our in-depth knowledge of the products, services and various market segments allows us to offer greater flexibility in structures, documentation and end of lease options.

- **100% Solution Financing**

  Financing your entire solution including hardware, software, and services, ensures more predictability in your project planning with fixed, manageable payments and low monthly payments.

- **Device as a Service (DaaS)**

  Leverage latest technology to advance your business. Customized solutions aligned to your needs. Flexibility to add equipment to support growth. Protect your technology with Lenovo's Premier Support service.

- **24/7 Asset management**

  Manage your financed solutions with electronic access to your lease documents, payment histories, invoices and asset information.

- **Fair Market Value (FMV) and $1 Purchase Option Leases**

  Maximize your purchasing power with our lowest cost option. An FMV lease offers lower monthly payments than loans or lease-to-own financing. Think of an FMV lease as a rental. You have the flexibility at the end of the lease term to return the equipment, continue leasing it, or purchase it for the fair market value. In a $1 Out Purchase Option lease, you own the equipment. It is a good option when you are confident you will use the equipment for an extended period beyond the finance term. Both lease types have merits depending on your needs. We can help you determine which option will best meet your technological and budgetary goals.

Ask your Lenovo Financial Services representative about this promotion and how to submit a credit application. For the majority of credit applicants, we have enough information to deliver an instant decision and send a notification within minutes.

Seller training courses

The following sales training courses are offered for employees and partners (login required). Courses are listed in date order.

1. **Partner Technical Webinar - Storage Battlecards and TCE Update**
   2026-08-18 | 35 minutes | Employees and Partners

   Storage Battlecards, Storage Promotion and TCE Updates

   Published: 2026-08-18
   Length: 35 minutes

   Start the training:
   Employee link: Grow@Lenovo
   Partner link: Lenovo 360 Learning Center

   Course code: AUG1426
2. **Data Storage Solutions Primer**
   2026-07-30 | 45 minutes | Employees Only

   This course is part of the Lenovo ISG (Infrastructure Solutions Group) Primer Series - a learning program designed to help Client Managers build foundational knowledge, strengthen customer conversations, and recognize opportunities with greater confidence.

   By the end of this course, you will be able to:

   - Understand how storage connects to modern IT and business outcomes
   - Explain the importance of storage in data-centric environments
   - Identify opportunities and align storage solutions to customer needs

   Last Update: July 30, 2026

   Published: 2026-07-30
   Length: 45 minutes

   Start the training:
   Employee link: Grow@Lenovo

   Course code: DSTOO104
3. **Guide d'étude pour l'examen de certification technique Lenovo Data Center**
   2026-07-13 | 10 minutes | Employees and Partners

   Ce guide contient des informations pour aider les candidats à se préparer et à s'inscrire aux examens pratiques et de certification Data Center Technical.

   Tags: Data Center

   Published: 2026-07-13
   Length: 10 minutes

   Start the training:
   Employee link: Grow@Lenovo
   Partner link: Lenovo 360 Learning Center

   Course code: LENU-322C-SG-FR

4. **Guide d'étude pour l'examen de certification des ventes de Lenovo Data Center**
   2026-07-13 | 10 minutes | Employees and Partners

   Ce guide contient des informations destinées à aider les candidats à se préparer et à s'inscrire aux examens pratiques et de certification en vente de centres de données.

   Tags: Cloud

   Published: 2026-07-13
   Length: 10 minutes

   Start the training:
   Employee link: Grow@Lenovo
   Partner link: Lenovo 360 Learning Center

   Course code: LENU-122C-SG-FR
5. **Lenovoデータセンターセールス認定試験学習ガイド**
   2026-07-13 | 10 minutes | Employees and Partners

   このガイドには、データセンターセールスの実技試験および認定試験の準備と登録に役立つ情報が含まれています。

   Tags: Data Center

   Published: 2026-07-13
   Length: 10 minutes

   Start the training:
   Employee link: Grow@Lenovo
   Partner link: Lenovo 360 Learning Center

   Course code: LENU-122C-SG-AJP
6. **Lenovoデータセンター技術認定試験学習ガイド（LENU-322C-SG-AJP)**
   2026-07-13 | 10 minutes | Employees and Partners

   このガイドには、受験者がLenovoデータセンター技術実技試験および認定試験の準備と登録を行う際に役立つ情報が含まれています。

   Tags: Data Center

   Published: 2026-07-13
   Length: 10 minutes

   Start the training:
   Employee link: Grow@Lenovo
   Partner link: Lenovo 360 Learning Center

   Course code: LENU-322C-SG-AJP

7. **Partner Technical Webinar - Data Protection - Ransomware**
   2026-05-04 | 60 minutes | Employees and Partners

   In this 60 minute replay, Dan Beins, Lenovo Storage Architect, provided an in-depth overview of Lenovo ransomware defenses across ThinkSystem DS, DG, and DM.

   Published: 2026-05-04
   Length: 60 minutes

   Start the training:
   Employee link: Grow@Lenovo
   Partner link: Lenovo 360 Learning Center

   Course code: MAY0126

8. **Partner Technical Webinar - Storage 101**
   2026-04-30 | 60 minutes | Employees and Partners

   In this 60 minute replay, Dan Beins, Lenovo Storage Architect, took us “back to basics” with a Storage Portfolio Overview 101.

   Published: 2026-04-30
   Length: 60 minutes

   Start the training:
   Employee link: Grow@Lenovo
   Partner link: Lenovo 360 Learning Center

   Course code: APR2426

9. **Family Portfolio: Storage**
   2026-02-13 | 50 minutes | Employees and Partners

   This course covers the Lenovo storage portfolio, from tape drives used for backups and archiving all the way through high-performance storage systems. After completing this course about the Storage family, the learner will be able to identify products and features within the family, describe the features of this Product Family, and recognize when a specific product should be selected.

   Tags: Storage, ThinkSystem

   Published: 2026-02-13
   Length: 50 minutes

   Start the training:
   Employee link: Grow@Lenovo
   Partner link: Lenovo 360 Learning Center

   Course code: SXSW1201r18

10. **ONTAP Unified Bundles Overview**
    2026-02-09 | 10 minutes | Employees and Partners

    This course provides a comprehensive overview of the ONTAP Unified Essentials and Unified Complete bundles, enabling participants to confidently position and recommend them in real-world customer engagements. Through practical guidance and detailed feature exploration, learners will gain a solid understanding of how each ONTAP bundle fits within today's competitive marketplace. By the end of the course, participants will be able to clearly articulate the capabilities of each offering, identify the right solution for a variety of customer scenarios, and determine when Unified Complete is the most effective choice for high-value opportunities. This course is designed to empower sales teams, technical specialists, and customer-facing roles with the knowledge needed to drive informed, strategic ONTAP recommendations.

    Tags: Sales, Storage

    Published: 2026-02-09
    Length: 10 minutes

    Start the training:
    Employee link: Grow@Lenovo
    Partner link: Lenovo 360 Learning Center

    Course code: DDMO104

11. **Lenovo ThinkSystem DM/DG Series Technical Positioning**
    2026-02-04 | 14 minutes | Employees and Partners

    The Lenovo ThinkSystem DM and DG Series Technical Positioning course offers a comprehensive exploration of Lenovo's enterprise storage portfolio, with a focused deep dive into the DM and DG series platforms. Designed for technical professionals, this training provides the knowledge needed to understand, evaluate, and position these high-performance, scalable, and secure storage solutions for modern business workloads.
    Participants will examine the architecture, technical capabilities, and deployment considerations of the DM and DG systems, gaining insights into how these solutions support diverse data environments. The course also reviews how these systems integrate into Lenovo's broader data management strategy, enabling organizations to optimize performance, enhance data protection, and streamline storage operations. By the end of the session, learners will be equipped to confidently position Lenovo's storage technologies in real-world scenarios.

    Tags: Data Management, Storage

    Published: 2026-02-04
    Length: 14 minutes

    Start the training:
    Employee link: Grow@Lenovo
    Partner link: Lenovo 360 Learning Center

    Course code: DSTOP201

12. **Partner Technical Webinar - ThinkSystem Intelligent Monitoring**
    2026-01-13 | 40 minutes | Employees and Partners

    In this 40-minute replay, Jocelyn Johnson, Lenovo WW Product Manager for Storage, presented TIM – ThinkSystem Intelligent Monitoring which is an actionable dashboard view of a customer's DE, DG, DM and DS Series storage. Jocelyn concluded the session with a live demo of TIM.

    Tags: Data Management

    Published: 2026-01-13
    Length: 40 minutes

    Start the training:
    Employee link: Grow@Lenovo
    Partner link: Lenovo 360 Learning Center

    Course code: JAN0926

13. **How to Order DM and DE Services Through DCSC**
    2025-08-28 | 35 minutes | Employees and Partners

    The goal of this training is to provide Lenovo sellers and business partners with an overview of the available services for ThinkSystem DM and DE.

    Learning Objectives:

    - Review what is included in each service
    - Describe the benefits of each service
    - Demonstrate how to order
    - Discover where to go for more details

    Tags: Services

    Published: 2025-08-28
    Length: 35 minutes

    Start the training:
    Employee link: Grow@Lenovo
    Partner link: Lenovo 360 Learning Center

    Course code: DSVC134r4

14. **Lenovo ThinkSystem DM/DG series Portfolio Overview**
    2025-07-23 | 60 minutes | Employees and Partners

    This course builds on the Data Management Overview DSTOO201 course by introducing you to the Lenovo ThinkSystem DG/DM Series Portfolio.

    By the end of this course, you will be able to:
    Position the Lenovo ThinkSystem DE Series products and features based on the needs of your customers
    Correlate the Lenovo ThinkSystem DE Series Portfolio with Lenovo's comprehensive Data Management Portfolio
    Use the qualifying questions to identify customer needs during conversations

    Tags: Data Management, Storage, ThinkSystem

    Published: 2025-07-23
    Length: 60 minutes

    Start the training:
    Employee link: Grow@Lenovo
    Partner link: Lenovo 360 Learning Center

    Course code: DDMO103
15. **Data Storage Solutions Overview**
    2025-06-18 | 25 minutes | Employees and Partners

    After completing this course you will be able to:
    1. Know more about the data management trends and challenges
    2. Understand the data storage solutions portfolio
    3. Find out how data drives business value

    Tags: Storage

    Published: 2025-06-18
    Length: 25 minutes

    Start the training:
    Employee link: Grow@Lenovo
    Partner link: Lenovo 360 Learning Center

    Course code: DSTOO102

16. **Lenovo Data Center Product Portfolio**
    2025-06-11 | 20 minutes | Employees and Partners

    This course introduces the Lenovo data center portfolio, and covers servers, storage, storage networking, and software-defined infrastructure products. After completing this course about Lenovo data center products, you will be able to identify product types within each data center family, describe Lenovo innovations that this product family or category uses, and recognize when a specific product should be selected.

    Course objectives:
    1.Identify product types within each data center family
    2.Describe the features of the product family or category
    3.Recognize when a specific product should be selected

    Tags: Advanced DataCenter, DataCenter Products, Server, ThinkAgile, ThinkEdge, ThinkSystem

    Published: 2025-06-11
    Length: 20 minutes

    Start the training:
    Employee link: Grow@Lenovo
    Partner link: Lenovo 360 Learning Center

    Course code: SXXW1110r8

17. **How to Attach Services for ThinkSystem DM Using DCSC**
    2024-12-23 | 20 minutes | Employees and Partners

    The goal of this training is to review services for ThinkSystem DM products, professional and support services, support levels, and recommended options. By the end of this course, you will be able to summarize the professional services for ThinkSystem DM, identify the levels of maintenance support for the DM series, and recognize the steps required to attach services to DM products.

    Tags: Services, ThinkSystem

    Published: 2024-12-23
    Length: 20 minutes

    Start the training:
    Employee link: Grow@Lenovo
    Partner link: Lenovo 360 Learning Center

    Course code: DSVC122r4

18. **ThinkSystem DM and DE Series Technical Overview**
    2024-10-15 | 30 minutes | Employees and Partners

    This course provides a technical overview of the ThinkSystem DM and DE series products. Course DDMO101 – Lenovo ThinkSystem DM & DE Series Overview is recommended prior to this course. By the end of this course, you should be able to:
    - Describe the Lenovo portfolio for the DM and DE storage systems
    - Explain features of the DM series ONTAP software
    - Explain features of the ThinkSystem SAN Manager

    Tags: Data Management, Storage

    Published: 2024-10-15
    Length: 30 minutes

    Start the training:
    Employee link: Grow@Lenovo
    Partner link: Lenovo 360 Learning Center

    Course code: DDMT100r2

19. **VTT Data Management How to sell storage - April 2024**
    2024-04-10 | 60 minutes | Employees and Partners

    In this course, you will know:

    - Why do we sell storage?
    - What are the basics you need to get an opportunity rolling?
    - Why Lenovo for Storage?
    - What is happening in the market today?
    - How to determine traction?

    Tags: Data Management, Storage

    Published: 2024-04-10
    Length: 60 minutes

    Start the training:
    Employee link: Grow@Lenovo
    Partner link: Lenovo 360 Learning Center

    Course code: DVDAT209

20. **Lenovo Data Backup and Recovery Solution Overview**
    2024-03-25 | 40 minutes | Employees and Partners

    The goal of this course is to give Lenovo sellers and business partners an overview of the Data Backup and Recovery solution. This course includes general information about backup, archive, disaster, nomenclature and key terms for back and recovery, and Lenovo features and alliance partners software.

    Tags: Data Management

    Published: 2024-03-25
    Length: 40 minutes

    Start the training:
    Employee link: Grow@Lenovo
    Partner link: Lenovo 360 Learning Center

    Course code: DSOLO200

21. **ONTAP Technical Positioning**
    2024-03-14 | 45 minutes | Employees and Partners

    This course focuses on enabling you to interpret the technical market trends and challenges that ONTAP customers face. You also learn to ask qualifying questions that identify which industries, companies, and customer contacts are appropriate targets for ONTAP software. Module two covers explaining ONTAP features and functionality and enabling you to strengthen ONTAP marketing claims with technical details.
    Learning Objectives:
    •Interpret the technical market trends and challenges that ONTAP customers face
    •Ask qualifying questions that identify which industries, companies, and customer contacts are appropriate targets for ONTAP software
    •Explain ONTAP features and functionality
    •Strengthen ONTAP marketing claims with technical details

    Tags: Data Management, Sales, Storage, Technical Sales, ThinkSystem

    Published: 2024-03-14
    Length: 45 minutes

    Start the training:
    Employee link: Grow@Lenovo
    Partner link: Lenovo 360 Learning Center

    Course code: DDMT200r2

22. **VTT ONTAP 9.14.1 and Bundle Change Update - February 2024**
    2024-03-07 | 25 minutes | Employees and Partners

    In this course, you will know more about:
    - The new Features of ONTAP 9.14.1 update
    - ONTAP Bundle Update

    Tags: Data Management, Storage

    Published: 2024-03-07
    Length: 25 minutes

    Start the training:
    Employee link: Grow@Lenovo
    Partner link: Lenovo 360 Learning Center

    Course code: DVDAT207
23. **Selling ONTAP**
    2024-03-06 | 22 minutes | Employees and Partners

    In this course, you learn how ONTAP software helps your customers simplify data management, access and protect their data across clouds, and future-proof their environments.
    Learning objectives:
    •Explain the value of ONTAP data-management software
    •Describe the features and benefits of ONTAP 9 software
    •Effectively position ONTAP software to your customers

    Tags: Data Management, Storage, Technical Sales, ThinkSystem

    Published: 2024-03-06
    Length: 22 minutes

    Start the training:
    Employee link: Grow@Lenovo
    Partner link: Lenovo 360 Learning Center

    Course code: DDMO102

24. **ONTAP Data Protection Fundamentals**
2023-11-02 | 76 minutes | Employees and Partners

In this course, we discuss the integrated data protection features in ONTAP data-management software. We also discuss the tools and software that you use to manage and monitor the data protection features. You learn about cluster peering, storage virtual machine (or SVM) peering, and data protection relationships. You also learn about the architecture and functionality of the Snapshot, SnapMirror, SnapVault, and SyncMirror technologies.

Course DDMT203 – ONTAP SAN Fundamentals is a prerequisite.
Course Objectives:
•Describe the integrated data protection features in ONTAP data-management software
•Identify the tools and software that you use to manage and monitor ONTAP data protection features
•Describe cluster peering, storage virtual machine (SVM) peering, and data protection relationships
•Explain the architecture and functionality of the Snapshot, SnapMirror, SnapVault, and SyncMirror technologies

Tags: Data Management, Sales, Storage, Technical Sales, ThinkSystem

Published: 2023-11-02
Length: 76 minutes

Start the training:
Employee link: Grow@Lenovo
Partner link: Lenovo 360 Learning Center

Course code: DDMT204r2

25. **Lenovo DM Series Data Efficiency Guarantee**
2023-10-09 | 10 minutes | Employees Only

The Data Efficiency Guarantee offers Lenovo customers an agreed amount of capacity savings. If the Lenovo solution does not meet the terms agreed to in the Guarantee, Lenovo will remediate.

Course Objectives:
•Define the Lenovo DM Series Data Efficiency Guarantee
•Understand how the guarantee works
•Describe the sales process for delivering and tracking the guarantee

Tags: Sales, Storage, ThinkSystem

Published: 2023-10-09
Length: 10 minutes

Start the training:
Employee link: Grow@Lenovo

Course code: DDMC100

26. **ThinkSystem DM Series Technical 200 - ONTAP Data Management Fundamentals**
    2023-10-03 | 90 minutes | Employees and Partners

    This course focuses on enabling you to manage and provision ONTAP systems and it is part of the ISG Sales education supporting our ThinkSystem DM and DE Series education. Before taking this course, you should have completed the ThinkSystem DM and DE Series Overview as well as the ThinkSystem DM and DE Series Technical Overview 100. 200 level technical knowledge is provided separately for the DM and DE Series products.

    This course focuses on enabling you to do the following:

    - Describe the consumers of resources and management requirements
    - Describe the user and administrative roles that manage resources
    - List the various data management products you can use to manage ONTAP systems
    - Define the resources that are commonly provisioned
    - Describe various methods and tools that can be used to provision resources

    Tags: Storage

    Published: 2023-10-03
    Length: 90 minutes

    Start the training:
    Employee link: Grow@Lenovo
    Partner link: Lenovo 360 Learning Center

    Course code: DDMT205

27. **ThinkSystem DM Series Technical 200 - ONTAP Cluster Fundamentals**
    2023-10-02 | 135 minutes | Employees and Partners

    This course identifies and describes the components that make up a cluster. It also describes the supported cluster configurations and details the steps that are required to create and configure a cluster as well as discusses the physical storage components and the Write Anywhere File Layout file system, also known as the WAFL file system. Course DDMT200 – ONTAP Technical Positioning is a prerequisite.

    By the end of this course, you will be able to:

    -Identify the components that make up a cluster
    -Describe the cluster configurations that are supported
    -Create and configure a cluster
    -Describe the physical storage components
    -Describe the Write Anywhere File Layout (WAFL) file system

    Tags: Storage

    Published: 2023-10-02
    Length: 135 minutes

    Start the training:
    Employee link: Grow@Lenovo
    Partner link: Lenovo 360 Learning Center

    Course code: DDMT201

28. **Assessment for Lenovo ThinkSystem DM and DE Series Technical Overview 100**
    2023-10-02 | 30 minutes | Partners Only

    This is the online assessment for the virtual-live course Lenovo ThinkSystem DM and DE Series Technical Overview 100 (DDMT100).

    Your objective for this assessment is to complete the 15-question quiz with the minimum passing score of 80%.

    Tags: Technical Sales

    Published: 2023-10-02
    Length: 30 minutes

    Start the training:
    Partner link: Lenovo 360 Learning Center

    Course code: DDMT101

29. **ThinkSystem DM Series Technical 200 Assessment**
    2023-09-28 | 15 minutes | Employees and Partners

    This is the assessment for the DM Series Technical 200 training

    Tags: Sales, Storage, ThinkSystem

    Published: 2023-09-28
    Length: 15 minutes

    Start the training:
    Employee link: Grow@Lenovo
    Partner link: Lenovo 360 Learning Center

    Course code: DDMT206

30. **VEEAM Solutions Sales Training**
    2023-09-27 | 20 minutes | Employees and Partners

    In this course you will learn about Hyper-availability for the Always-On Enterprise.

    By the end of this training, you should be able to:

    Identify and explain the core products and solutions offered by Veeam.
    Explain the key benefits and value propositions of integrating Veeam solutions with Lenovo products.

    Tags: Sales

    Published: 2023-09-27
    Length: 20 minutes

    Start the training:
    Employee link: Grow@Lenovo
    Partner link: Lenovo 360 Learning Center

    Course code: DSTOO100

31. **ONTAP SAN Fundamentals**
2023-09-26 | 60 minutes | Employees and Partners

In this course, you learn how ONTAP provides block access to a host by using SAN protocols. You learn about LUNs and how to map them to a host to enable read and write access. You also learn about multipathing techniques that can improve availability and performance.
The course objectives are:
1.Describe how ONTAP provides block access to a host
2.Explain how SANs use the iSCSI, FC, and FCoE protocols to transport data between a host and storage system
3.List the steps that are required to access a LUN in a storage virtual machine (SVM) from the host
4.Describe multipathing between the host and a cluster

Tags: Sales, Storage, ThinkSystem

Published: 2023-09-26
Length: 60 minutes

Start the training:
Employee link: Grow@Lenovo
Partner link: Lenovo 360 Learning Center

Course code: DDMT203

32. **ONTAP NAS Fundamentals**
2023-09-25 | 45 minutes | Employees and Partners

This course describes how ONTAP provides file access to clients. The course also explains how you use the NFS and SMB protocols to access files, how you access files over a network, and how you use load-balancing techniques to improve performance.
Course objectives:
1.Describe how ONTAP provides file access to clients
2.Use the NFS protocol to access files
3.Use the SMB protocol to access files
4.Access files over a network and use the load-balancing features of ONTAP

Tags: Sales, Storage, ThinkSystem

Published: 2023-09-25
Length: 45 minutes

Start the training:
Employee link: Grow@Lenovo
Partner link: Lenovo 360 Learning Center

Course code: DDMT202

33. **VEEAM Hyper-Availability Integration with ThinkSystem DM Series**
2023-09-20 | 20 minutes | Employees and Partners

In this course you will learn about VEEAM Hyper-Availability for ThinkSystem DM Series

Tags: ThinkSystem

Published: 2023-09-20
Length: 20 minutes

Start the training:
Employee link: Grow@Lenovo
Partner link: Lenovo 360 Learning Center

Course code: DSTOO300

34. **VTT The Benefits of Scale Out Clustering with DM/DG - September 2023**
2023-09-12 | 60 minutes | Employees Only

In this course, you will know more about:
- What is scale out?
- Hardware benefits
- Administrative benefits
- Scale out Features

Tags: Data Management, ThinkSystem

Published: 2023-09-12
Length: 60 minutes

Start the training:
Employee link: Grow@Lenovo

Course code: DVDAT204

35. **Storage Masters - Unified Storage on DM Series**
2023-07-28 | 14 minutes | Employees and Partners

Storage Masters is a multi-module education series. It is intended to help sellers and partners be able to discuss various storage topics that you will encounter in the field and how to position the valuable features of the DM Series within these conversations.

By the end of this training, you should be able to:
•Describe the business challenges resolved by the unified storage for the ThinkSystem DM series.
•Learn about the technology implemented on the DM series of storage arrays.
•Find out what are the benefits of the technology and positioning.

Tags: Data Management, Storage

Published: 2023-07-28
Length: 14 minutes

Start the training:
Employee link: Grow@Lenovo
Partner link: Lenovo 360 Learning Center

Course code: DSTOT2006

36. **Storage Masters - DM Series - Data Security**
    2023-06-30 | 14 minutes | Employees and Partners

    Storage Masters is a multi-module education series. It is intended to help sellers and partners be able to discuss various storage topics that you will encounter in the field and how to position the valuable features of the DM Series within these conversations.

    Tags: Data Management, Storage

    Published: 2023-06-30
    Length: 14 minutes

    Start the training:
    Employee link: Grow@Lenovo
    Partner link: Lenovo 360 Learning Center

    Course code: DSTOT2005

37. **Benefits and the positioning of Lenovo ThinkSystem file offerings with WEKA, DSS, and DM+ONTAP**
    2023-05-08 | 10 minutes | Employees and Partners

    Course objectives:
    1.Learn about file storage
    2.Understand the different types of storage
    3.Recognize the Lenovo data management portfolio

    Tags: Artificial Intelligence (AI), Storage, Technical Sales

    Published: 2023-05-08
    Length: 10 minutes

    Start the training:
    Employee link: Grow@Lenovo
    Partner link: Lenovo 360 Learning Center

    Course code: DSOLS207

38. **Storage Masters - DM Series Performance**
2023-02-15 | 15 minutes | Employees and Partners

Storage Masters is a multi-module education series. It is intended to help sellers and partners be able to discuss various storage topics that you will encounter in the field and how to position the valuable features of the DM Series within these conversations.

By the end of this course, you will be able to:
•Understand the key business challenges that companies face with their data storage solutions
•Describe DM Series features
•Explain the benefit of DM Series features to customers

Tags: Data Management, Storage, ThinkSystem

Published: 2023-02-15
Length: 15 minutes

Start the training:
Employee link: Grow@Lenovo
Partner link: Lenovo 360 Learning Center

Course code: DSTOT2004r3

39. **ONTAP Fundamentals Bundle**
2023-02-01 | 15 minutes | Employees and Partners

ONTAP Fundamentals is intended to help sellers and partners be able to discuss the ONTAP Fundamentals license. By the end of this training, you should be able to position ONTAP Fundamentals within the marketplace; describe the ONTAP bundle; identify when to use the ONTAP Bundle in an opportunity; and determine when to use ONTAP Premium in an opportunity.

Tags: DataCenter Products, Storage

Published: 2023-02-01
Length: 15 minutes

Start the training:
Employee link: Grow@Lenovo
Partner link: Lenovo 360 Learning Center

Course code: DSTOF200

40. **Storage Masters - Hybrid Cloud for DM Series**
2023-02-01 | 30 minutes | Employees and Partners

Storage Masters is a multi-module education series. It is intended to help sellers and partners be able to discuss various storage topics that you will encounter in the field and how to position the valuable features of the DM Series within these conversations.

Tags: Storage

Published: 2023-02-01
Length: 30 minutes

Start the training:
Employee link: Grow@Lenovo
Partner link: Lenovo 360 Learning Center

Course code: DSTOT2003

41. **Lenovo DM Storage Series - Hybrid Cloud Solutions**
    2022-11-04 | 15 minutes | Employees Only

    This course focuses on enabling you to:
    •Identify DM Series Hybrid Cloud Solutions
    •Describe features of the DM Series FabricPool capability
    •Describe features of the DM Series Cloud Volumes ONTAP capability.

    Tags: Cloud, Storage, Technology solutions

    Published: 2022-11-04
    Length: 15 minutes

    Start the training:
    Employee link: Grow@Lenovo

    Course code: DDM201

42. **Data Infrastructure Management - DM Series Storage**
    2022-10-28 | 25 minutes | Employees Only

    This course provides a technical overview of the ThinkSystem DM series products. Course DDMO101 – Lenovo ThinkSystem DM & DE Series Overview is recommended prior to this course.

    By the end of this course, you should be able to:
    •Recognize the components of the Lenovo Data Management portfolio
    •Discuss the features of the Lenovo Data Management components
    •Describe the features of the SnapCenter software components

    Tags: Sales, Storage, Technical Sales, ThinkSystem

    Published: 2022-10-28
    Length: 25 minutes

    Start the training:
    Employee link: Grow@Lenovo

    Course code: DDM200

Related publications and links

For more information, see the following resources:

- Lenovo Data Center Unified Storage product page
  https://www.lenovo.com/us/en/c/data-center/storage/unified-storage
- Lenovo Data Center Solution Configurator
  http://dcsc.lenovo.com
- ThinkSystem DM Series documentation
  https://datacentersupport.lenovo.com/us/en/storagepubs
- ONTAP Ransomware Protection
  https://datacentersupport.lenovo.com/us/en/storagepubs/ontap/ontap-security-hardening/autonomous-ransomware-protection
- Lenovo Data Center Support - ThinkSystem DM5000H
  http://datacentersupport.lenovo.com/us/en/products/storage/lenovo-storage/thinksystem-dm5000h

Related product families

Product families related to this document are the following:

- DM Series Storage
- Lenovo SAN Storage

Notices

Lenovo may not offer the products, services, or features discussed in this document in all countries. Consult your local Lenovo representative for information on the products and services currently available in your area. Any reference to a Lenovo product, program, or service is not intended to state or imply that only that Lenovo product, program, or service may be used. Any functionally equivalent product, program, or service that does not infringe any Lenovo intellectual property right may be used instead. However, it is the user's responsibility to evaluate and verify the operation of any other product, program, or service. Lenovo may have patents or pending patent applications covering subject matter described in this document. The furnishing of this document does not give you any license to these patents. You can send license inquiries, in writing, to:

Lenovo (United States), Inc.
8001 Development Drive
Morrisville, NC 27560
U.S.A.
Attention: Lenovo Director of Licensing

LENOVO PROVIDES THIS PUBLICATION ”AS IS” WITHOUT WARRANTY OF ANY KIND, EITHER EXPRESS OR IMPLIED, INCLUDING, BUT NOT LIMITED TO, THE IMPLIED WARRANTIES OF NON-INFRINGEMENT, MERCHANTABILITY OR FITNESS FOR A PARTICULAR PURPOSE. Some jurisdictions do not allow disclaimer of express or implied warranties in certain transactions, therefore, this statement may not apply to you.

This information could include technical inaccuracies or typographical errors. Changes are periodically made to the information herein; these changes will be incorporated in new editions of the publication. Lenovo may make improvements and/or changes in the product(s) and/or the program(s) described in this publication at any time without notice.

The products described in this document are not intended for use in implantation or other life support applications where malfunction may result in injury or death to persons. The information contained in this document does not affect or change Lenovo product specifications or warranties. Nothing in this document shall operate as an express or implied license or indemnity under the intellectual property rights of Lenovo or third parties. All information contained in this document was obtained in specific environments and is presented as an illustration. The result obtained in other operating environments may vary. Lenovo may use or distribute any of the information you supply in any way it believes appropriate without incurring any obligation to you.

Any references in this publication to non-Lenovo Web sites are provided for convenience only and do not in any manner serve as an endorsement of those Web sites. The materials at those Web sites are not part of the materials for this Lenovo product, and use of those Web sites is at your own risk. Any performance data contained herein was determined in a controlled environment. Therefore, the result obtained in other operating environments may vary significantly. Some measurements may have been made on development-level systems and there is no guarantee that these measurements will be the same on generally available systems. Furthermore, some measurements may have been estimated through extrapolation. Actual results may vary. Users of this document should verify the applicable data for their specific environment.

© Copyright Lenovo 2026. All rights reserved.

This document, LP0885, was created or updated on August 7, 2026.

Send us your comments in one of the following ways:

- Use the online Contact us review form found at:
  https://lenovopress.lenovo.com/LP0885
- Send your comments in an e-mail to:
  comments@lenovopress.com

This document is available online at https://lenovopress.lenovo.com/LP0885.

Trademarks

Lenovo and the Lenovo logo are trademarks or registered trademarks of Lenovo in the United States, other countries, or both. A current list of Lenovo trademarks is available on the Web at https://www.lenovo.com/us/en/legal/copytrade/.

The following terms are trademarks of Lenovo in the United States, other countries, or both:
Lenovo®
Lenovo TruScale®
ThinkAgile®
ThinkSystem®
TruScale®
XClarity®

The following terms are trademarks of other companies:

Linux® is the trademark of Linus Torvalds in the U.S. and other countries.

Microsoft®, Excel®, Internet Explorer®, Windows Server®, and Windows® are trademarks of Microsoft Corporation in the United States, other countries, or both.

IBM® is a trademark of IBM in the United States, other countries, or both.

NVIDIA® is a trademark of NVIDIA Corporation.

Other company, product, or service names may be trademarks or service marks of others.