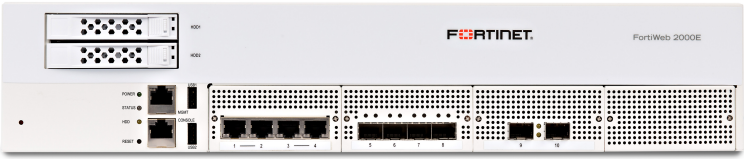

FortiWeb 2000E

QuickStart Guide

November 05, 2020

5th Edition

Copyright© 2017–2018 Fortinet, Inc. All rights reserved. Fortinet®, FortiGate®, FortiCare® and FortiGuard®, and certain other marks are registered trademarks of Fortinet, Inc., in the U.S. and other jurisdictions, and other Fortinet names herein may also be registered and/or common law trademarks of Fortinet. All other product or company names may be trademarks of their respective owners. Performance and other metrics contained herein were attained in internal lab tests under ideal conditions, and actual performance and other results may vary. Network variables, different network environments and other conditions may affect performance results. Nothing herein represents any binding commitment by Fortinet, and Fortinet disclaims all warranties, whether express or implied, except to the extent Fortinet enters a binding written contract, signed by Fortinet's General Counsel, with a purchaser that expressly warrants that the identified product will perform according to certain expressly-identified performance metrics and, in such event, only the specific performance metrics expressly identified in such binding written contract shall be binding on Fortinet. For absolute clarity, any such warranty will be limited to performance in the same ideal conditions as in Fortinet's internal lab tests. In no event does Fortinet make any commitment related to future deliverables, features or development, and circumstances may change such that any forward-looking statements herein are not accurate. Fortinet disclaims in full any covenants, representations, and guarantees pursuant hereto, whether express or implied. Fortinet reserves the right to change, modify, transfer, or otherwise revise this publication without notice, and the most current version of the publication shall be applicable.

Register for Support

Register your Fortinet product to receive:
- Technical Support
- New product features
- Protection from new threats

Vous devez enregistrer le produit pour recevoir:
- Support technique
- Nouvelles fonctionnalitées du produit
- Protection contre de nouvelles menaces

La reistrazione ti permette di usufruire di:
- Supporto Tecnico
- Nuove funzionalita
- Proteezione dalle ultime minaccce

Debe registrar el producto para recibir:
- Apoyo técnico
- Nuevas funcionalidades del producto
- Protección contra ataques

登録のお願い
本日、フォーティネット製品の登録をしてください。
登録すると次のメリットがあります。
テクニカルサポート・新機能の追加・新しい脅威への防御

请马上注册
您的飞塔产品
您在注册以后才能得到技术支持、新产品特点信息、最新威胁防护

https://support.fortinet.com
Toll free: 1 866 648 4638
Phone: 1 408 486 7899
Fax: 1 408 235 7737
Email: register@fortinet.com

Box Includes

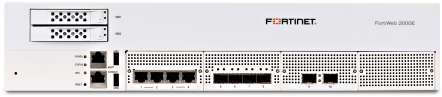

FortiWeb 2000E

QuickStart Guide

2 Power cables

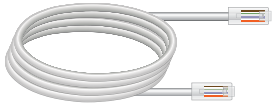

Ethernet cable

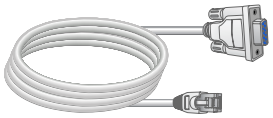

Console cable

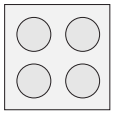

5 Rubber feet

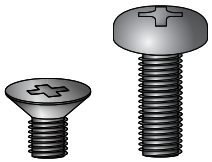

6 M4 screws for sliding rails handles
2 M6 rack mount screws

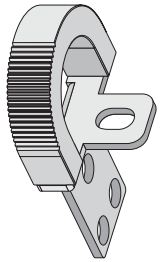

2 Sliding rail handles

8 Round hole pins for sliding rails
10 M4 screws for sliding rails

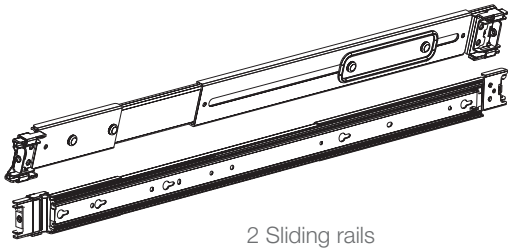

2 Sliding rails

Before You Begin

Write down details that you may need from your network administrator or ISP.

DSL PPPoE

Username

Password

Cable Modem DHCP

It is normal to not require a hostname but your ISP may require it.

Hostname

T1/E1, Static broadband, Cable, or DSL with a static IP

IP Address

Subnet Mask

Default Gateway

Primary/Secondary DNS

1 Basic Connections

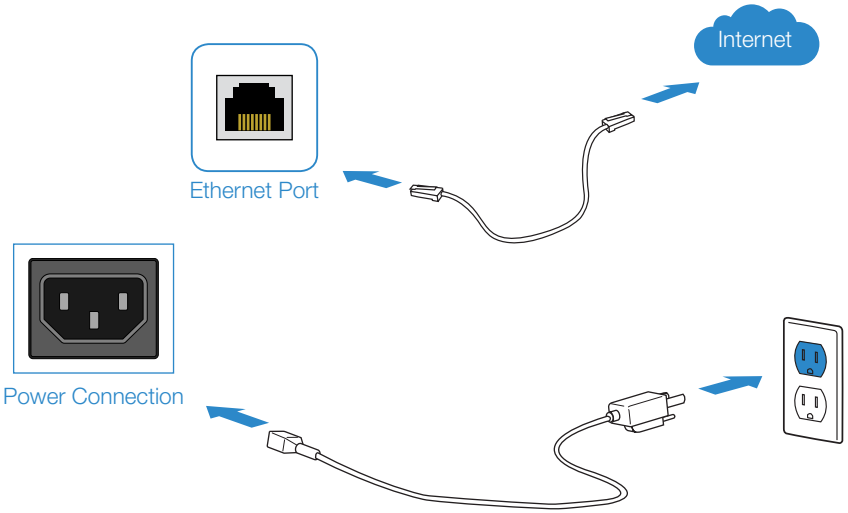

Connect your device to a power outlet and an Internet connection with an Ethernet port (ports 1-10). This is usually a modem, but could also be another device on your network.

2 FortiWeb Setup Options

A Web Browser
With Ethernet cable (p.5)

B Terminal Emulation
With console cable (p.6)

A Web Browser with Ethernet cable

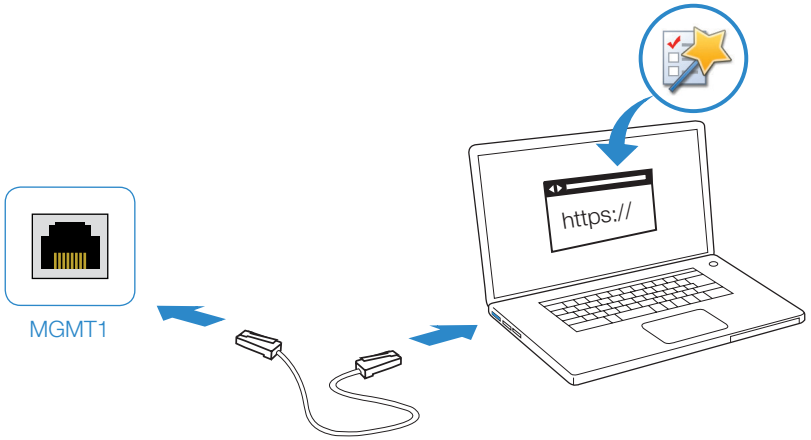

Web-based Manager

1. Use the Ethernet cable to connect MGMT port of the FortiWeb unit to the management computer.
2. Configure the management computer to match the FortiWeb unit's default MGMT subnet. For example:

   IP address: 192.168.1.2
   Netmask: 255.255.255.0

3. Visit 192.168.1.99 in your web browser.
4. Login using username "admin" and no password.
5. Configure your device and save your settings.
6. Register your device from the dashboard page.

B Terminal Emulation with Console Cable

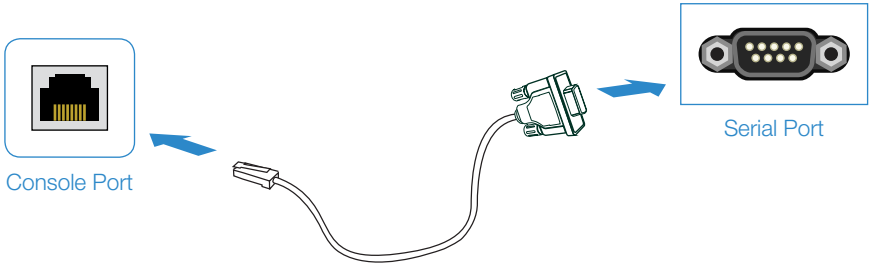

To Connect to the CLI

1. Connect the FortiWeb unit console port to the management computer using the provided console cable.
2. Start a terminal emulation program on the management computer. Select the COM port and use the following settings:

   Baud Rate: 9600
   Data bits: 8
   Parity: None
   Stop bits: 1
   Flow Control: None

3. Press Enter on your keyboard to connect to the CLI.
4. Login using username "admin" and no password. You can now proceed with configuring your FortiWeb unit.

   Get started by typing "?" for a list of available commands.

   Begin typing a command and type "?" for a list of available ways to complete. For example "config ?" shows the lowest level of configuration options.

   For a detailed guide, visit http://docs.fortinet.com/fortiweb/reference.

3 General Installation

The FortiWeb unit can be mounted in any standard 19 inch rack unit with the provided rail mount kit.

Please read the "Cautions and Warnings" on page 20 prior to installing your device.

To install the FortiWeb unit into a rack:

1. Ensure that the FortiWeb unit is placed on a stable surface prior to rack-mount installation.
2. Assemble the rails and install the system in the rack following the safety instructions and the rack installation instructions in Rail Installation (p. 8).
3. Verify that the spacing around the FortiWeb unit conforms to requirements and that the unit is level.
4. Connect the provided power cables to the system.
5. Plug the other end of the power cables into separate power sources, such as uninterruptible power supplies (UPS) or power distribution units (PDU).
6. Insert one end of the provided Ethernet cable into one of the Ethernet ports on the FortiWeb unit. Insert the other end to a router or switch that is connected to the Internet.
7. Press the power button on the system to turn on the device.

Do not place heavy objects on the unit.

4 Rail Installation

To install the FortiWeb unit using the rail mount kit:

1. To remove the chassis (inner) member, pull the slide open, and then press the trigger down as shown on the drawing, and pull the chassis (inner) member out.

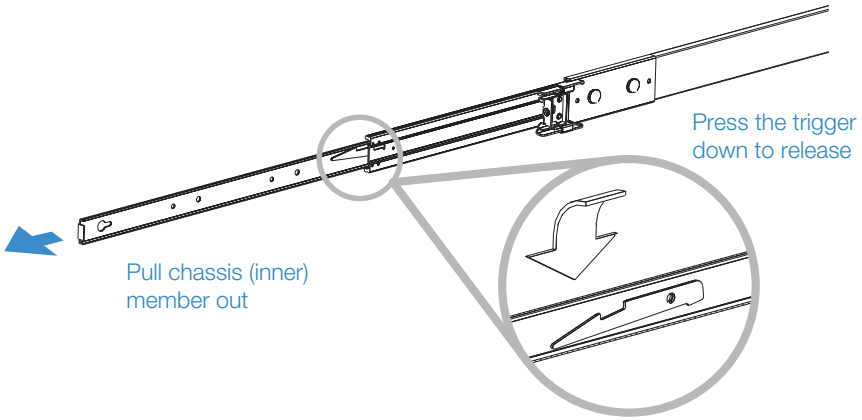

2. Use the standoffs to mount the chassis (inner) member to the chassis.

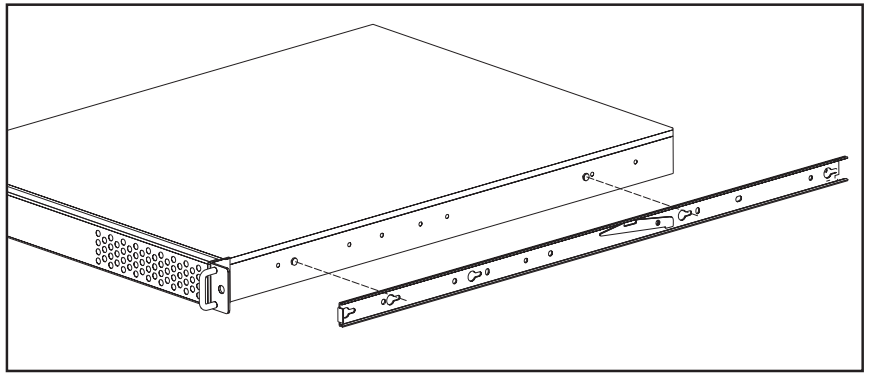

3. To attach the cabinet (outer) member to the rail, first ensure that the safety lock is in the unlocked position. Then, insert the stag into the upper and lower square holes on the EIA rail from the back of the rail.
   Finally, push the safety lock forward to secure the bracket.

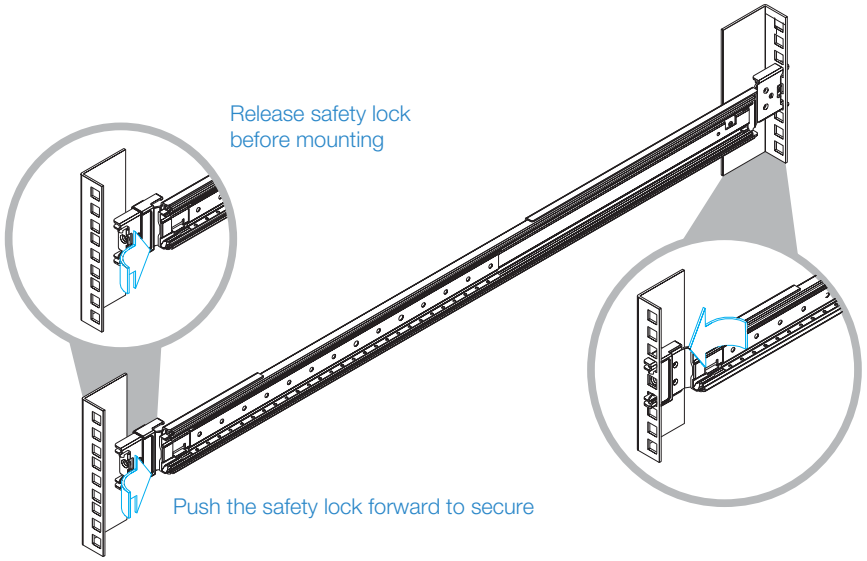

4. To mount the chassis into the cabinet, first ensure that the ball retainer is in the fully open position. Then, insert the chassis (inner) member into the cabinet member. When you push the chassis back into the cabinet, press the trigger down to release the slide from the locked position.

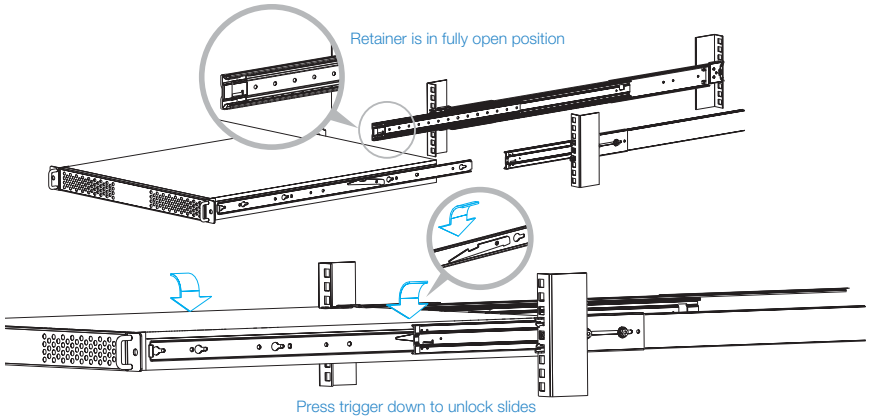

SFP Transceivers

Caution: SFP transceivers are static sensitive devices. Use an ESD wrist strap or similar grounding device when handling transceivers.

Do not install or remove SFP transceivers while fiber-optic cables are still attached. This can cause damage to the cables, cable connectors, and the optical interfaces. It may also prevent the transceiver from latching correctly into the socket connector.

Note: Installing and removing SFP transceivers can shorten their useful life. Do not install or remove transceivers more than is necessary.

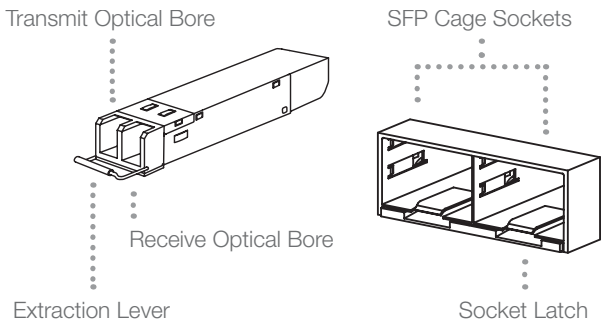

To install the SFP transceivers

1. Ensure that you are properly grounded.
2. Remove the caps from the SFP cage sockets on the front panel of the unit.
3. Position the SFP transceiver in front of the cage socket opening and ensure that the transceiver is correctly oriented. When the transceiver is correctly oriented, the extraction lever will be level with the socket latch.
   Note: SFP cage socket orientation may vary. Ensure that the SFP transceiver module is correctly oriented each time that you are inserting a transceiver.
4. Hold the sides of the SFP transceiver and slide it into the cage socket until it clicks into place.

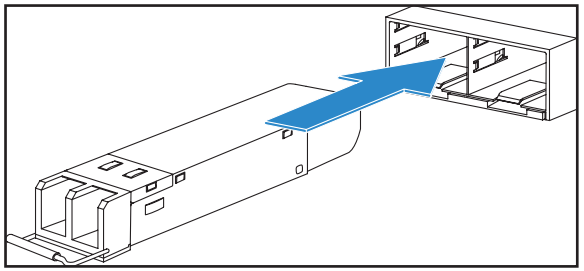

5. Press the transceiver firmly into the cage socket with your thumb.
6. Verify that the transceiver is latched correctly by grasping the sides of the transceiver and trying to pull it out without lowering the extraction lever.
   If the transceiver cannot be removed, it is installed and latched correctly.
   If the transceiver can be removed, reinsert it and press harder with your thumb.
   If necessary, repeat this process until the transceiver is securely latched into the cage socket.

To remove the SFP transceivers

1. Ensure that you are properly grounded.
2. If applicable, disconnect the fiber-optic cable from the transceiver connector and install a clean dust plug in the transceiver's optical bores.
3. Pull the extraction lever out and down to eject the transceiver. If you are unable to use your finger to open the lever, use a small flat-head screwdriver or other similar tool to open the lever.

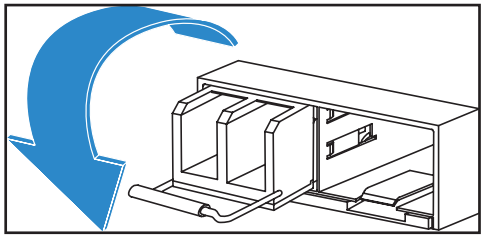

4. Hold the sides of the transceiver and carefully pull it away from the cage socket.

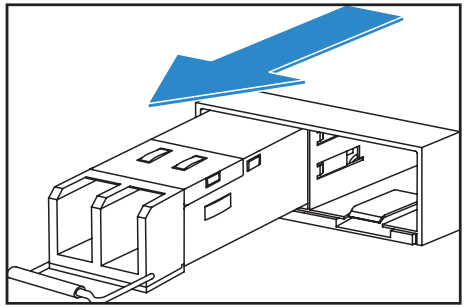

5. Replace the cap on the SFP cage socket and place the removed SFP transceiver into an antistatic bag.

Caution: Do not force the SFP transceivers into the cage slots. If the transceiver does not easily slide in and click into place, it may not be aligned correctly or may be upside down. If this happens, remove the SFP transceiver, realign it or rotate it and slide it in again.

Note: Follow proper fiber-optic handling procedures when installing and removing SFP transceivers to ensure the devices remain clean and are not damaged.

2x HDD Bay
Hot-swappable HDD bays
for Log Disk usage

MGMT
Dedicated Gigabit Ethernet Management
Port for system management

2 x USB Ports
Reserved for future use

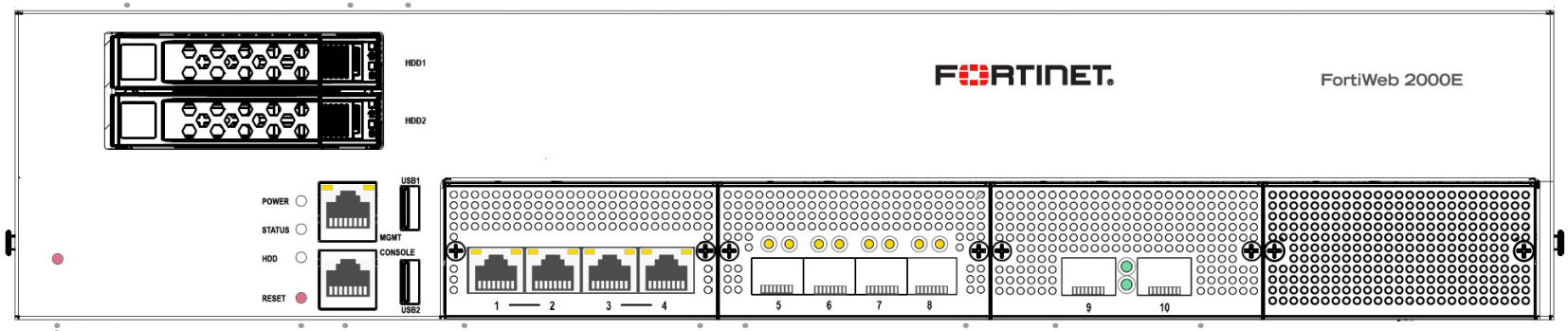

Reset Button
Reboot the system

NMI Button
Reserved for software application

4x RJ-45 Port 1-4
4x RJ-45 Gigabit Ethernet ports
with hardware LAN bypass for
connections to your DUT

4x SFP Ports 5-8
4x SFP Gigabit Ethernet ports for
connections to your DUT

SFP+ Ports 9-10
10 Gigabit Ethernet ports for
connections to your DUT.

Console
Optional connection to the management
computer. Provides access to the CLI

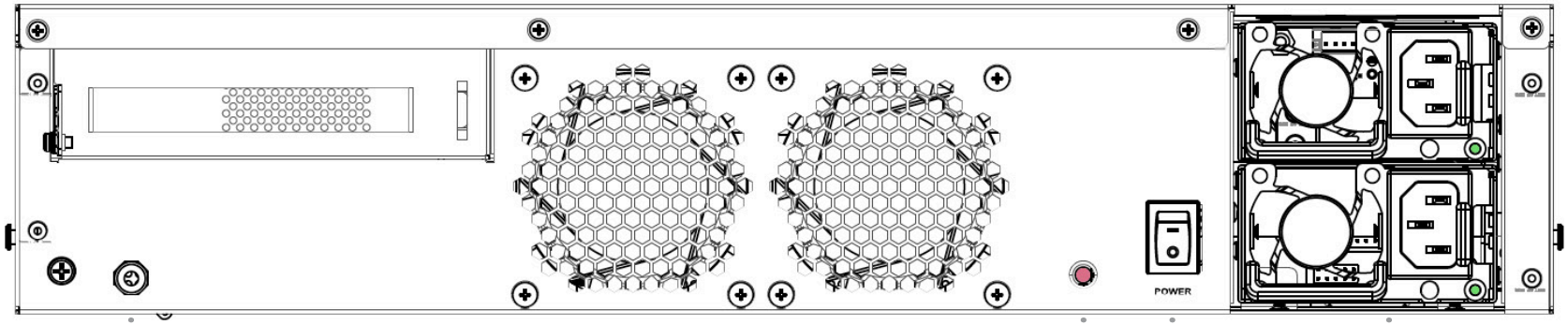

Grounding Screws
Provides extra grounding

Power Supply Warning Buzz Reset Button
To disable power supply warning buzz

Power Switch
To turn the power ON/OFF

Power Connections
100 – 240VAC, 50 – 60 Hz, 8 – 4 A
redundant power supply

HDD Power Indicator (Top)
- Green: The HDD is in service
- Off: The HDD is OFF or not installed

HDD Activity Indicator (Bottom)
- Flashing Amber: HDD in use

MGMT Port Link/Activity (Left)
- Flashing Amber: Transmitting & receiving data
- Off: No link established

MGMT Port Speed (Right)
- Amber: Port is connected at 1Gbps
- Green: Port is connected at 100Mbps
- Off: Port is connected at 10Mbps or is not in use

PORT 5 – 8 Link/Activity (Left)
- Flashing Amber: Transmitting & receiving data
- Off: No link established

PORT 5 – 8 Speed (Right)
- Amber: Port is connected at 1Gbps
- Off: Port is not in use

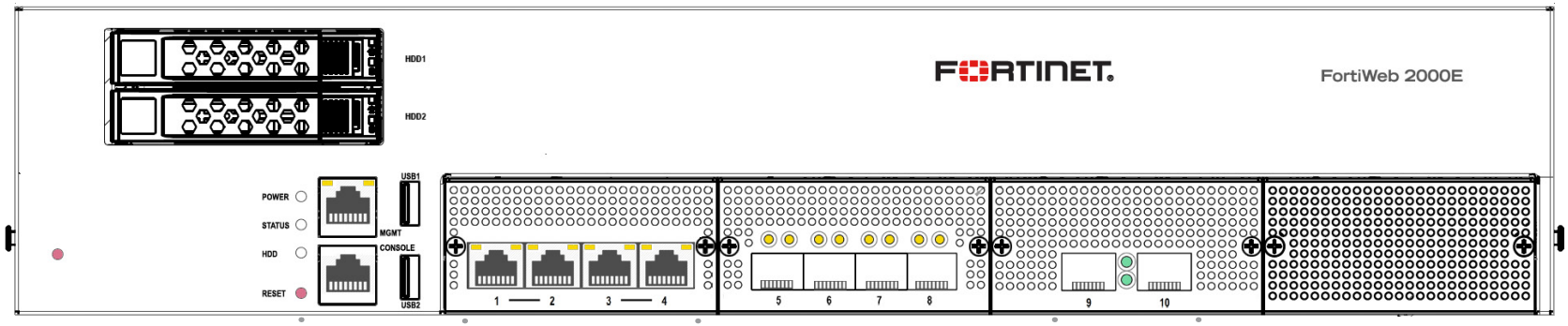

Power
- Green: The unit is ON
- Off: The unit is OFF

Status
- Off: System is normal
- Green: Minor system alarm
- Red: System failure

HDD
- Flashing Amber: HDD in use

PORT 1 – 4 Link/Activity (Left)
- Flashing Amber: Transmitting & receiving data
- Off: No link established

PORT 1 – 4 Speed (Right)
- Amber: Port is connected at 1Gbps
- Green: Port is connected at 100Mbps
- Off: Port is connected at 10Mbps or is not in use

PORT 9 – 10: Link/Activity
- Amber: 10Gbps / 1Gbps link established
- Flashing Amber: 10Gbps / 1Gbps link active
- Off: No link established

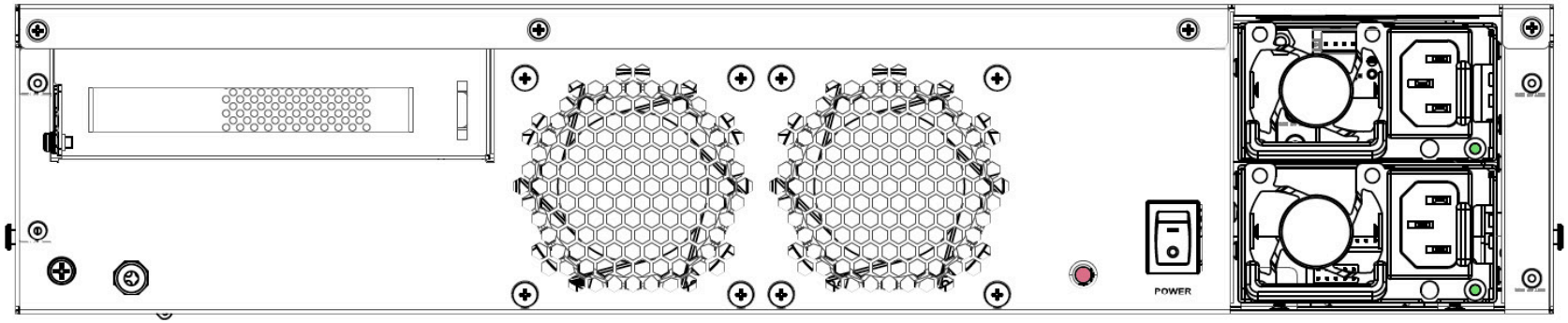

Power Supply Status

- Green: Power supply is operating normally
- Red: Power supply is not connected to power or failure

Cautions and Warnings

Environmental specifications

Ambient operating temperature: 0C to 40C

Rack Mount Instructions - The following or similar rack-mount instructions are included with the installation instructions:

Instructions de montage en rack - Les instructions de montage en rack suivantes ou similaires sont incluses avec les instructions d'installation:

Elevated Operating Ambient - If installed in a closed or multi-unit rack assembly, the operating ambient temperature of the rack environment may be greater than room ambient. Therefore, consideration should be given to installing the equipment in an environment compatible with the maximum ambient temperature (Tma) specified by the manufacturer.
Température ambiante élevée – S'il est installé dans un rack fermé ou à unités multiples, la température ambiante de fonctionnement de l'environnement du rack peut être supérieure à la température ambiante de la pièce. Par conséquent, il est important d'installer le matériel dans un environnement respectant la température ambiante maximale (Tma) stipulée par le fabricant.

Reduced Air Flow - Installation of the equipment in a rack should be such that the amount of air flow required for safe operation of the equipment is not compromised.
Ventilation réduite – Installation de l'équipement dans un rack doit être telle que la quantité de flux d'air nécessaire au bon fonctionnement de l'équipement n'est pas compromise.

Mechanical Loading - Mounting of the equipment in the rack should be such that a hazardous condition is not achieved due to uneven mechanical loading.
Chargement Mécanique – Montage de l'équipement dans le rack doit être telle qu'une situation dangereuse n'est pas lié à un chargement mécanique inégal.

Circuit Overloading - Consideration should be given to the connection of the equipment to the supply circuit and the effect that overloading of the circuits might have on overcurrent protection and supply wiring. Appropriate consideration of equipment nameplate ratings should be used when addressing this concern.
Surtension – Il convient de prendre l'ensemble des précautions nécessaires lors du branchement de l'équipement au circuit d'alimentation et être particulièrement attentif aux effets de la suralimentation sur le dispositif assurant une protection contre les courts-circuits et le câblage. Ainsi, il est recommandé de tenir compte du numéro d'identification de l'équipement.

Reliable Earthing - Reliable earthing of rack-mounted equipment should be maintained. Particular attention should be given to supply connections other than direct connections to the branch circuit (e.g. use of power strips).
Fiabilité de la mise à la terre– Fiabilité de la mise à la terre de l'équipement monté en rack doit être maintenue. Une attention particulière devrait être accordée aux connexions d'alimentation autres que les connexions directes au circuit de dérivation (par exemple de l'utilisation de bandes de puissance).

Refer to specific Product Model Data Sheet for Environmental Specifications (Operating Temperature, Storage Temperature, Humidity, and Altitude)
Référez à la Fiche Technique de ce produit pour les caractéristiques environnementales (Température de fonctionnement, température de stockage, humidité et l'altitude).

Safety

Warning: Equipment intended for installation in Restricted Access Location.
Avertissement: Le matériel est conçu pour être installé dans un endroit où l'accès est restreint.

Battery – Risk of explosion if the battery is replaced by an incorrect type. Do not dispose of batteries in a fire. They may explode. Dispose of used batteries according to your local regulations. IMPORTANT: Switzerland: Annex 4.10 of SR814.013 applies to batteries.
Batterie – Risque d'explosion si la batterie est remplacée par un type incorrect. Ne jetez pas les batteries au feu. Ils peuvent exploser. Jetez les piles usagées conformément aux réglementations locales. IMPORTANT: Suisse: l'annexe 4.10 de SR814.013 s'appliquent aux batteries.
警告
本電池如果更換不正確會有爆炸的危險
請依製造商說明書處理用過之電池

Caution: Disconnect power supply cords before servicing.
Attention: Débranchez les cordons de la source d'alimentation avant tout entretien.

Caution: Slide/rail mounted equipment is not to be used as a shelf or a work space.
Attention: Un équipement monté sur bâti ne doit pas être utilisé sur une étagère ou dans un espace de travail.

Regulatory Notices

Federal Communication Commission (FCC) – USA

This device complies with Part 15 of FCC Rules. Operation is subject to the following two conditions:
(1) this device may not cause harmful interference, and
(2) this device must accept any interference received; including interference that may cause undesired operation.

This equipment has been tested and found to comply with the limits for a Class A digital device, pursuant to Part 15 of the FCC Rules. These limits are designed to provide reasonable protection against harmful interference when the equipment is operated in a commercial environment. This equipment generates, uses, and can radiate radio frequency energy, and if it is not installed and used in accordance with the instruction manual, it may cause harmful interference to radio communications. Operation of this equipment in a residential area is likely to cause harmful interference, in which case the user will be required to correct the interference at his own expense.

WARNING: Any changes or modifications to this product not expressly approved by the party responsible for compliance could void the user's authority to operate the equipment.

Industry Canada Equipment Standard for Digital Equipment (ICES) – Canada

CAN ICES-3 (A) / NMB-3 (A)
This digital apparatus does not exceed the Class A limits for radio noise emissions from digital apparatus set out in the Radio Interference Regula¬tions of the Canadian Department of Communications.

Cet appareil numérique n'émet pas de bruits radioélectriques dépassant les limites applicables aux appareils numériques de la classe A prescrites dans le Règlement sur le brouillage radioélectrique édicte par le ministère des Communications du Canada.

European Conformity (CE) - EU

This is a Class A product. In a domestic environment, this product may cause radio interference, in which case the user may be required to take adequate measures.

Product Safety Electrical Appliance & Material (PSE) – Japan

日本では電気用品安全法(PSE)の規定により、同梱している電源コードは本製品の専用電源コードとして利用し、他の製品に使用しないでください。

Voluntary Control Council for Interference (VCCI) – Japan

この装置は、クラスA情報技術装置です。この装置を 家庭環境で使用すると電波妨害を引き起こすことがあります。この場合には使用者が適切な対策を講ずるよう要求されることがあります。ＶＣＣＩ－Ａ

Bureau of Standards Metrology and Inspection (BSMI) – Taiwan

這是甲類的資訊產品，在居住的環境中使用時，可能會造成射頻干擾，在這種情況下，使用者會被要求採取某些適當的對策。

Bureau of Standards Metrology and Inspection (BSMI) – Taiwan

The presence conditions of the restricted substance (BSMI RoHS table) are available at the link below:
https://www.fortinet.com/bsmi

China

此为A级产品，在生活环境中，该产品可能会造成无线电干扰。这种情况下，可能需要用户对其采取切实可行的措施。

Fortinet Customer Service & Support

Create a support account, register and manage your products, download updates, firmware images and release notes, and create technical support tickets.
https://support.fortinet.com

Fortinet Document Library

Up-to-date versions of Fortinet publications for the entire family of Fortinet products.
http://docs.fortinet.com

Training Services

Course descriptions, availability, schedules, and location of training programs in your area.
http://www.fortinet.com/support/training.html

Technical Discussion Forums

Communicate with other customers and Fortinet partners about Fortinet products, services, and configuration issues.
https://support.fortinet.com/forum

FortiGuard Threat Research and Response

Up-to-date information on vulnerabilities and threats, includes a virus scanner, IP signature look-up, and web filtering tools.
http://www.fortiguard.com

Fortinet Product License Agreement / EULA and Warranty Terms

https://www.fortinet.com/content/dam/fortinet/assets/legal/EULA.pdf

Fortinet.com